Diamond Bits

Diamond Contours

Full Round Crown
General purpose core bit. Performs well in a wide range of rock materials. Available in all commercial sizes.

Semi-Round Crown
Good all-around core bit. Performs well in hard rock. Also used in wire line core bits for drilling solid formations.

Semi-Flat Crown
Usually used for drilling soft, unconsolidated rock conditions.

Taper Crown
Ideal for coring in soft to medium hard rock. Used for conventional or wire line core bits.

Multi-Step Crown
Usually selected for core drilling hard rock with wire line core barrels.

Bottom Discharge Crown
Designed to minimize water contact with core, especially in soft rock coring.

Multi-Air & Fluid Crown
Generally used for fast cooling of the bit when coring medium-hard rock with air or heavy mud circulation.

Ring Diamond Reamer
Multi-spaced strips of diamonds used for long life in hard rock applications.

Strip Diamond Reamer
Four equally divided diamond inserts for soft rock applications.

Concave Crown
Special concave crown on non-coring bits. Used for wedging operations or for drilling blind holes in shales or limestone.

Pilot Crown
Special pilot crown on non-coring bits. Used for drilling drain holes, powder holes or redrilling grouted holes for pressure tests.

Diamond Bits

Diamond Bit Profiles

Full-round in which the crown radius equals 50 percent of the kerf width.

Semi-round in which the crown radius equals 60 percent to 70 percent of the kerf width.

Flat crown in which there is no radius.

Semi-flat in which the crown radius equals 100 percent of the kerf width.

**Bit contours above illustrate only a partial listing of the bit styles available from Acker Drill Co.*

Note: *Kerf width is defined as the difference between O.D. and I.D. set dimensions divided by two. The step-type design, quite popular in recent years, is also available on request.*

Silhouette: *Showing DCDMA Standards.*

Standard Tools are Satisfactory for Most Conditions

Conditions encountered vary so widely, and present so many different problems, that it is impossible to design a single type of bit for all-around operations. By a careful grouping of the elements essential to making a bit, it is possible to make a standard bit which will perform well under general drilling conditions.

Diamond Setting

All diamonds used in Acker bits are carefully selected and a high level of quality maintained at all times. The diamonds are hand-set in an oriented manner, setting the hardest vector of the diamond toward the work. Continuous inspection is carried on to insure that high standards of workmanship are maintained.

Diamond Size

The diamond size is generally dictated by the formation being drilled.

In softer formations, large diamonds will prevent the bit from blocking up. These large diamonds offer more resistance to shock when drilling fractured rock.

In hard fine-grained rock the hardness increases so it becomes necessary to use more and smaller diamonds. Additional stones provide more cutting "edge" and also distribute the added pressure more evenly over the face of the bit.

On the following pages you will note that several sizes of diamonds with their approximate carat weights are shown for each bit. Larger or smaller diamonds are available for special applications.

Matrix

The matrix has three functions to perform: It must securely hold the diamonds in their present pattern, Resist shock, and Dissipate heat away from the diamonds. While tests have shown that the Rockwell hardness scale is not always a true guide to abrasion resistance, it is the most commonly used. The Acker Drill Company has developed three matrices which have a greater resistance to abrasion without appreciably increasing the hardness scale readings.

The patent pending matrices used are:

B.M. A blended soft matrix.
A matrix for nonabrasive formations *(20 to 30 RC)*

A.R. Abrasion Resistant.
A special blended matrix used when drilling fractured or very abrasive formations. *(30 to 40 RC)*

H.M. A hard matrix.
Used in fairly abrasive formations. *(40 to 50 RC)*

Waterways

The most important function of the waterway in the diamond bit is to aid in flushing the cuttings. The number and size of the waterways used depend largely on the formation being drilled.

When drilling in shales or other soft formations, it is often desirable to use a multi-waterway bit. This design permits quick removal of the cuttings, and helps prevent blocking.

In harder rock, the finer size cuttings require less waterways while the need for greater diamond concentration increases. It is common here to use only two (2) waterways. In free cutting rock, when maximum diamond concentration is desired, no waterways are used.

As a general rule, the following combination of stone size and waterways are used:
10, 15 and 26 SPC4 waterways
44, 62 and more2 Waterways

Reinforced Waterways

Tungsten carbide inserts set at the waterways are recommended for extremely abrasive or broken formations.

Grit Facing

Tungsten carbide grit facing is recommended for extremely abrasive formations for the "M" and "L" design bits to prevent the bit body from prematurely wearing thin.

Face Contours

There are many types of face contours currently used in bit design. The four most commonly used are defined by DCDMA as: full-round, semi-round, flat and semi-flat crowns.

Unless otherwise specified, the semi-round contour will be furnished.

DCDMA Standards

The above abbreviation stands for the Diamond Core Drill Manufacturers Association of which Acker Drill Co. is a charter member. This organization has standardized several sizes of diamond core bits throughout this reference. Otherwise all bits conform to the standards and tolerance as established by the Association.

Metric Diamond Core Bits

Acker manufactures a full line of metric size diamond core bits and reamers. Metric bits and reamers feature the same high quality of diamonds and manufacture as employed in DCDMA standards. Ask us to bid on your requirements and prove to your satisfaction–reduced cost per foot.

Acker Standard Diamond Coring Bits

The Acker standard coring bit design and construction have proven popular and most satisfactory for general purpose drilling assignments. On large or difficult coring jobs, Acker field technicians will be pleased to design a bit to meet your specific conditions and provide the lowest possible cost per foot.

Acker "WG" Design Core Bits

West African Bortz

Size	Part No.	Approx. Carat Weight 10-SPC	26-SPC	44-SPC	62-SPC
RWG	—	4.50	3.50	3.00	2.50
XRP*	20008-B	4.50	3.50	3.00	2.50
EWG	20001-B	8.00	6.00	5.00	4.50
AWG	20003-B	11.50	9.00	7.50	6.50
BWG	20006-B	15.00	11.50	9.50	8.50
NWG	20007-B	23.00	17.00	14.00	12.00
HWG	20172-B	35.00	28.00	22.00	20.00

**Optional sizes*

Acker "M" Design Diamond Coring Bits

The DCDMA "M" Design core barrels and bits are used when coring soft, friable or broken formations. They are available with conventional waterways or bottom discharge design. Bottom discharge bits have internal water ports that permit the water to bypass the core and prevent erosion of soft materials.

Grit facing strips are available for coring in very abrasive formations and to avoid excess wear on the bit body.

Acker "M" Design Core Bits*

West African Bortz

Size	Part No.	Approx. Carat Weight 10-SPC	26-SPC	44-SPC	62-SPC
EWM	20017-B	8.00	6.00	5.00	4.50
AWM	20018-B	11.50	9.00	7.50	6.50
BWM	20020-B	15.00	11.50	9.50	8.50
NWM	20021-B	23.00	17.00	14.00	12.00

**Please specify conventional or bottom discharge waterways when ordering.*

Acker DCDMA Large Design Coring Bits

These bits are for use with DCDMA standardized large diameter design double tube core barrels for recovery of large diameter cores in rock-like material. They are available with internal waterways or with bottom discharge ports that allow the water to bypass the core. They are available with all the options of the Acker bits.

DCDMA Large Design Core Bits

Size	Part No. Internal Discharge	Part No. Bottom Discharge	Approx. Carat Weight 10-SPC	26-SPC	44-SPC
2-3/4 " x 3-7/8" — *(97.5 x 68.3 mm)*	20035	20038	46.0	29.0	25.0
4" x 5-1/2" — *(138.0 x 100.8 mm)*	20036	20039	60.0	48.0	42.0
6" x 7-3/4" — *(194.4 x 151.6 mm)*	20037	20040	95.0	75.0	65.0

Wire Line System Diamond Bits

Diamond bits are stocked in standard sizes. The chart shows basic part numbers and diamond carat size. Four diamond grades are available as well as special features such as extra hard matrix, tungsten hard facing, and reinforced waterways. Many other competitive features are available on request. Consult Acker price lists for details...Please specify step-type or conventional crown.

Wire Line Diamond Core Bits

Symbol Size	Part No.	No. of Steps	Step-Type Surface Set Crown, Carat Weight 10-SPC	26-SPC	44-SPC	62-SPC	Conventional Crown, Carat Weight 26-SPC	44-SPC	62-SPC
AWL	20048	2	20.00	16.00	14.00	12.00	14.00	9.00	8.00
BWL	20049	3	25.00	21.50	18.00	16.00	16.00	14.00	12.00
NWL	20050	4	34.00	26.00	21.00	19.00	22.00	19.00	17.00
HWL	20129	4	60.00	41.00	24.00	21.00	36.00	22.00	20.00
PWL	20132	4	80.00	52.00	36.00	28.00	48.00	34.00	30.00

Diamond Bits

"W" Design Carbide Insert Flush Joint Casing		
Size	Shoes Part No.	Casing Bit Part No.
EW	300870-2	300880-2
AW	300871-2	300881-2
BW	300872-2	300882-2
NW	300873-2	300883-2
HW	300874-2	300884-2
PW	300875-2	300885-2
SW	300876-2	300886-2
UW	300877-2	300887-2
ZW	300878-2	300888-2

Acker Diamond Casing Shoes and Bits–"W" Design

Acker surface set diamond casing shoes and bits are available for the approved DCDMA flush joint "W" design casing. "W" casing bits and shores are only available with box thread connections. Casing bits and shoes have a standard pin thread connection. Box threads are available on request.

Acker Carbide Insert Casing Shoes and Bits–"W" Design

Available in all standard sizes for DCDMA "W" Design casing. The carbide insert is a very economical bit for spinning in casing through soft rock strata or where casing is left in the hole. More economical than diamonds, the carbides withstand shock loads when drilling overburden. Carbides may not be sharpened and are usually run to destruction. There is no salvage value.

DCDMA "W" Design Diamond Casing Shoes				
Casing Size	Surface Set Part No.	Carat Weight		
		10-SPC	26-SPC	44-SPC
RW	20439	*	*	*
EW	20440	10.00	7.00	6.00
AW	20441	13.00	9.00	7.00
BW	20442	18.00	13.00	11.00
NW	20443	23.00	18.00	15.00
HW	20444	38.00	27.00	23.00
PW	20445	*	*	*
SW	20446	*	*	*
UW	20447	*	*	*
ZW	20448	*	*	*

**Information on application.*

Casing Shoes

The casing shoe is generally used in caving overburden where the "spun in" casing cannot be removed without the hole caving. For this problem, the casing shoe is designed without diamonds on the radius. This allows the shoe bit to stay in place at the bottom of the casing and accommodate other tools passing through the shoe without danger of being destroyed by the diamonds in the bit. After operations are completed, the shoe is recoverable.

DCDMA "W" Design Diamond Casing Bits				
Casing Size	Surface Set Part No.	Carat Weight		
		10-SPC	26-SPC	44-SPC
RW	20481	*	*	*
EW	20482	13.00	9.00	7.00
AW	20483	20.00	14.00	12.00
BW	20484	26.00	18.00	15.00
NW	20485	30.00	22.00	20.00
HW	20486	40.00	28.00	25.00
PW	20487	*	*	*
SW	20488	*	*	*
UW	20489	*	*	*
ZW	20490	*	*	*

**Information on application.*

Casing Bits

A casing bit is usually set with diamonds and used to rotate the casing into solid materials where it can be withdrawn without the hole caving in for the purpose of cementing other casing into place. The diamond casing bit has both inside and outside diamonds to facilitate making a hole with clearance as well as using the casing as a drill tube.

Acker Standard Carbide Insert Coring Bits		
Size	"G"Design Part No.	"M" Design Part No.
EWG/M	301637-2	300123-2
AWG/M	301638-2	300090-2
BWG/M	301639-2	300028-2
NWG/M	301640-2	300061-2
Note: Size XRP is available on request.		

Acker Carbide Coring Bits Large Design		
Large Design Size	Carbide Insert	
	Internal Discharge	Bottom Discharge
2-3/4 x 3-7/8	300832-2	300833-2
4 x 5-1/2	300838-2	300839-2
6 x 7-3/4	300844-2	300845-2
Specify part numbers when ordering.		

Diamond Type Wire Line Reaming Shells		
Size	Reaming Shell Balanced Ring	
	Part No.	Ct. Wt.
AWL	20295	5.5
BWL	20296	6.5
NWL	20297	8.0
HWL	20704	10.0
PWL	20705	12.0

Single Tube–Double Tube–"M" and Wire Line Design

Reaming shells containing diamonds either in vertical strips or in the balanced ring design and are available for use with all standard size and "M" design bits and core barrels. Acker reaming shells are also available for core barrels of other makes *(Give size, manufacturer, etc. when ordering.)*

The reaming shell protects the core barrel from wear and maintains the guage of the hole. Four types of reaming shells are available: The strip type, the balanced ring type, and the carbide insert or hard faced type.

Job conditions and drillers' preference usually dictate the type used.

Acker Standard Carbide Insert Core Bits

The carbide inserts are arranged in a conventional pattern to provide ample inside and outside cutting clearance for coring. This bit is widely used for gumbo tills and soft shales. The new larger inserts increase effectiveness and contribute to longer bit life. The carbides may be resharpened, however, the bit is generally used to destruction.

Large Design DCDMA Carbide Bits Standard and Pyramid Types

At a considerable saving over diamond bits, Acker makes available a very successful quality bit in both carbide insert and pyramid type for drilling soft rock. Carbides are set to provide maximum cutting. There is no salvage to this type bit, therefore, it is run to destruction. There is no salvage value.

Hard Faced Reaming Shells			
Size	Single Tube Shells	Double Tube Shells	"M" Type Shells
	Part No.	Part No.	Part No.
EWG	301763	—	—
AWG	301719	301768	—
BWG	301685	—	301765
NWG	101587-2	—	300916
HWG	*	*	*
**On Request*			

Standard Large Design Reaming Shells			
Size	Diamond Ring Type		Carbide
	Part No.	Ct. Wt.	Part No.
2-3/4 x 3-7/8	20257-R	9.0	300971
4 x 5-1/2	20258-R	16.0	300975
6 x 7-3/4	20259-R	20.0	200999

Standard Single Tube Reaming Shells					
Size	Diamond Strip Type		Diamond Ring Type		Carbide
	Part No.	Ct. Wt.	Part No.	Ct. Wt.	Part No.
EWG	20723-S	2.25	20723-R	3.75	301676
AWG	20724-S	3.00	20724-R	4.50	301677
BWG	20725-S	3.00	20725-R	6.50	301678
NWG	20726-S	3.00	20726-R	7.50	301679
HWG	20823-S	6.0	20823-R	*	*
**On Request.*					

Standard Double Tube Reaming Shells					
Size	Diamond Strip Type		Diamond Ring Type		Carbide
	Part No.	Ct. Wt.	Part No.	Ct. Wt.	Part No.
EWG	20727-S	2.25	20727-R	3.75	301680
AWG	20728-S	3.00	20728-R	4.50	301681
BWG	20729-S	3.00	20729-R	6.50	301682
NWG	20730-S	3.00	20730-R	7.50	301683
HWG	20816-S	6.0	20816-R	*	*
**On Request.*					

Standard "M" Design Reaming Shells					
Size	Diamond Strip Type		Diamond Ring Type		Carbide
	Part No.	Ct. Wt.	Part No.	Ct. Wt.	Part No.
EWM	20248-S	2.25	20248-R	3.75	300319
AWM	20249-S	3.00	20249-R	4.50	300320
BWM	20251-S	3.00	20251-R	6.50	300175
NWM	20252-S	3.00	20252-R	7.50	300169

Reference and Specifications Chart

All Acker Diamond Bits and Reaming Shells conform to the standards set forth by the Diamond Core Drill Manufacturers Association *(DCDMA)*.

The "WG" design, "WM" design and the large design are validated by DCDMA and the American National Standards Institute.

	Diamond Core Bits						Reaming Shells	
	Nominal Core Diameter		Nominal Hole Diameter		Set Dimensions +/- .005		Set Dimensions +/- .005	
Size	Inches	mm	Inches	mm	O.D.	I.D.	O.D.	mm
RW	3/4	19.0	1-1/8	28.5	1.160	.735	1.175	29.8
XRP*	7/8	21.1	1-5/16	33.3	1.295	.875	1.310	33.2
EX-EWG	7/8	21.2	1-1/2	37.7	1.470	.845	1.485	37.7
EXM-EWM	7/8	21.2	1-1/2	37.7	1.470	.845	1.485	37.7
AX-AWG	1-1/8	30.0	1-7/8	48.0	1.875	1.185	1.890	48.0
AXM-AWM	1-1/8	30.0	1-7/8	48.0	1.875	1.185	1.890	48.0
BX-BWG	1-5/8	42.0	2-3/8	59.9	2.345	1.655	2.360	59.9
BXM-BWM	1-5/8	42.0	2-3/8	59.9	2.345	1.655	2.360	59.9
NW-NWG	2-1/8	54.7	3	75.7	2.965	2.155	2.980	75.7
NXM-NWM	2-1/8	54.7	3	75.7	2.965	2.155	2.980	75.7
HX-HWG	3	76.2	3-7/8	98.8	3.890	3.000	3.907	99.2
2-3/4 x 3-7/8	2-3/4	68.3	3-7/8	98.8	3.840	2.690	3.875	98.4
4 x 5-1/2	4	100.8	5-1/2	139.6	5.435	3.970	5.495	139.6
6 x 7-3/4	6	151.6	7-3/4	196.8	7.655	5.970	7.750	196.9

**Optional Sizes*

	Casing Bits						Casing Reaming Shell			Casing Shoes	
	Nominal Core		Nominal Hole		Set Dimensions		Dimensions			Set Dimensions	
Size	Inches	mm	Inches	mm	O.D.	I.D.	O.D.	Inches	mm	O.D.	I.D.
EX-EW	1-13/32	36.7	1-7/8	47.6	1.875	1.405	1.890	1-29/32	48.0	1.875	1.495
AX-AW	1-25/32	45.2	2-3/8	60.0	2.345	1.780	2.360	2-3/8	59.9	2.345	1.900
BX-BW	2-7/32	56.3	3	76.2	2.965	2.215	2.980	2-31/32	75.6	2.965	2.370
NX-NW	2-27/32	72.2	3-1/2	88.9	3.615	2.840	3.630	3-5/8	92.2	3.615	2.992
HX-HW	3-25/32	96.0	4-5/8	117.4	4.625	3.777	—	—	—	4.625	3.925
PW	4-5/8	117.4	5-21/32	143.6	5.650	4.633	—	—	—	5.650	4.778
SW	5-51/64	147.2	6-51/64	172.6	6.790	5.633	—	—	—	6.790	5.778
UW	6-13/16	173.0	7-13/16	198.4	7.800	6.755	—	—	—	7.800	6.905
ZW	7-29/32	200.8	8-13/16	223.8	8.810	7.755	—	—	—	8.810	7.905

Plug Bits			
	Hole Diameter		Set Dimensions
Size	Inches	mm	
XRP	1-1/4	31.7	1.295
EWG	1-1/2	38.1	1.470
AWG	1-7/8	47.6	1.875
BWG	2-3/8	60.3	2.345
NWG	3	76.2	2.965

Wire Line Bits							
	Nominal Hole Diameter		Nominal Core Diameter		Standard Set O.D. Dimension	Reaming Shell Set O.D. Dimension	Set I.D. Dimension
Size	Inches	mm	Inches	mm	In. *(Approx.)*	In. *(Approx.)*	In. *(Approx.)*
AWL	1-57/64	48.0	1-1/16	27.0	1.875	1.890	1.062
BWL	2-23/64	60.0	1-7/16	36.5	2.345	2.360	1.437
NWL	2-63/64	75.8	1-7/8	47.6	2.965	2.980	1.875
HWL	3-25/32	96.0	2-1/2	63.5	3.766	3.782	2.500
PWL	4-53/64	122.6	3-11/32	85.0	4.805	4.827	3.343

Drill Rods and Couplings

Drill rods are manufactured from cold drawn steel tubing and have square threads. Each rod is furnished with one flush coupling. All Acker drill rod couplings are heat-treated.

"W" Design Drill Rods
Assembly Includes Rod and Coupling

Length of Rod Assembly	EW Part No.	AW Part No.	BW Part No.	NW Part No.	HW Part No.
1 ft. *(.30m)*	21004-1	21005-1	21006-1	21007-1	21106-1
2 ft. *(.61m)*	21004-2	21005-2	21006-2	21007-2	21106-2
5 ft. *(1.52m)*	21004-5	21005-5	21006-5	21007-32	21106-5*
10 ft. *(3.05m)*	21004-10	21005-10	21006-10	21007-31	21106-10*
Coupling Only	110004	110005	110006	110007	111063

** Nonstandard and Metric Sizes Available.*

"W" Design (World Standards)

The "W" Design drill rod sizes and thread characteristics are standardized by the Diamond Core Drill Manufacturer's Association to insure proper connection between rods and couplings purchased anywhere in the world.

The old series drill rods and couplings known as E, A, B and N are obsolete. However, they are still available for use with older equipment.

"W" Design rods and couplings, compared to the old series, have a larger outside and inside diameter which allows more fluid inside the rods and produces increased velocity of fluid returning to the surface.

"W" Design Drill Rod Specifications

Size	O.D.		I.D.		Threads	Weight		Coupling I.D.		Coupling Weight	
	Inches	mm	Inches	mm	Per Inch	lbs./ft.	kg/m	Inches	mm	lbs.	kg
EW	1-3/8	34.9	15/16	23.8	3	2.8	4.2	7/16	11.1	1.0	.45
AW	1-3/4	44.5	1-1/4	31.8	3	4.3	6.4	5/8	15.8	2.0	.90
BW	2-1/8	53.9	1-3/4	44.4	3	4.3	6.4	3/4	19.0	3.5	1.59
NW	2-5/8	66.6	2-1/4	57.1	3	5.5	8.2	1-3/8	34.9	5.5	2.50
HW	3-1/2	88.9	3-1/16	77.8	3	8.8	13.1	2-3/8	60.3	7.6	3.45

"W" Design Casing Specifications

Size	O.D.		I.D.		Threads	Weight	
	Inches	mm	Inches	mm	Per Inch	lbs./ft.	kg/m
EW	1-13/16	46.0	1-1/2	38.1	4	2.8	4.2
AW	2-1/4	57.1	1-29/32	48.4	4	3.9	5.8
BW	2-7/8	73.0	2-3/8	60.3	4	7.0	10.4
NW	3-1/2	88.9	3	76.2	4	8.4	12.5
HW	4-1/2	114.3	4	101.6	4	11.7	17.4
PW	5-1/2	139.7	5	127.0	3	16.0	23.8
SW	6-5/8	168.2	6	152.4	3	20.0	29.8
UW	7-5/8	193.6	7	177.8	2	23.4	34.8
ZW	8-5/8	219.0	8	203.2	2	23.8	35.4

"W" Design Casings and Drive Shoes

Casing is primarily used to seal off overburden, weathered surface formations and large fissures in the formation. Casing permits drilling fluids to circulate and return cuttings to the surface. Sizes are specified by DCDMA to allow nesting or telescoping and interchangeability between manufacturers.

"W" Design Flush Joint Casing

The "W" DCDMA Standard Flush Joint Heavy Duty Casing is made from steel tubing and is flush inside and outside, with no internal coupling. "W" Casing is a heavy wall type with a shoulder chamfer and coarse square threads *(Coupled sections butt on connection)*.

"W" Design
Casing Drive Shoes

Size	Part No.	Weight	
		lbs.	kg
EW	110203-17	0.6	0.27
AW	110203-18	1.0	0.45
BW	110203-19	1.8	0.82
NW	110203-20	2.7	1.2
HW	110203-21	4.1	1.86
PW	110203-22	9.0	4.1
SW	110203-23	14.0	6.35
UW	110203-24	18.0	8.16
ZW	110203-25	24.0	10.9

Flush Joint Casing "W" Design
DCDMA Specifications

Casing Length	EW Part No.	AW Part No.	BW Part No.	NW Part No.	HW Part No.	PW Part No.	SW Part No.	UW Part No.	ZW Part No.
2 ft. (.61m)	110688-2	110689-2	110690-2	110691-2	110613-2	110692-2	110693-2	110694-2	110695-2
5 ft. (1.52m)	110688-4	110689-4	110690-4	110691-4	110613-4	110692-4	110693-4	110694-4	110695-4
10 ft. (3.048m)	110688-5	110689-5	110690-5	110691-5	110613-5	110692-5	110693-5	110694-5	110695-5

Note: Nonstandard and Metric sizes available.

Drill Supplies

Drive Heads					
Casing Size	Part No.	Guide Pipe Size		Weight	
		Inches	mm	lbs.	kg
AW	110201-137	2-1/2	63.5	19.3	8.75
BW	110201-108	2-1/2	63.5	19.5	8.85
NW	110201-109	2-1/2	63.5	21.0	9.5
HW	110201-100	2-1/2	63.5	35.0	15.88
AX	110201-71	2-1/2	63.5	19.5	8.85
BX	110201-73	2-1/2	63.5	19.8	8.98
NX	110201-75	2-1/2	63.5	21.0	9.55

Drive Head

Drive Weight w/Chain Sling

Drive Weights					
Drive Weight		Pipe/Casing Size		Assembly Part No.	
lbs.	kg	Inches	mm	With Chain	Without Chain
140*	63.5	2-1/2	63.5	21029-2	21063-2
250†	113.4	2-1/2	63.5	21029-5	21063-5
300	136.0	2-1/2	63.5	21029-7	21063-7
350†	158.8	2-1/2	63.5	21029-8	21063-8

**Standard Penetration Test. †Special Order.*

Drive Rings				
Pipe Size		Part No.	Weight	
Inches	mm		lbs.	kg
2-1/2	63.5	110535	9.0	4.1
4	101.6	110531	12.0	5.4

Guide and Pull Piece Assembly* (Schedule 120-ASTM A-120 Butt-Welded Black Steel Pipe)						
Pipe Size		Length		Assembly	Weight	
Inches	mm	Inches	cm	Part No.	lbs.	kg
2-1/2	63.5	36	91.4	21031-42	45.0	20.4
2-1/2	63.5	42	106.7	21031-43	53.0	24.0
2-1/2	63.5	48	121.9	21031-45	57.0	25.9

**Drive Head Not Included.*

Drive Weights

Light duty *(140 lb.)* drive weights are primarily used for "Standard Penetration Tests" with drive type samplers.

Heavier drive weights are used to drive pipe, casing, chopping bits, boulder busters and heavy duty samplers. They are operated like a pile driver.

Drive weights are available with or without a chain sling.

Drive Heads

Acker Drive Heads are threaded with a pin thread on the bottom to take the casing being driven and a box thread on the top to accommodate a guide and pull piece. Reverse drive action is used to pull the pipe. Internal box threads are used to accommodate drive samplers or chopping bits.

Note:

1. All Drive heads are supplied with AW box thread unless otherwise noted.
2. Other size internal rod box threads available.
3. Three inch guide pipe available.

Pipe Drive Rings

Drive rings are designed to slip over the drive pipe and rest against the pipe coupling. The ring protects the coupling and drive hammer when bumping out or driving the pipe.

Pull Piece

Assembly is made from double extra heavy drive pipe threaded at both ends and includes a drive pipe coupling. It screws directly into the top of the drive head *(Not Included)*. The drive pipe coupling is used when bumping back casing or samplers. The pipe stem serves as a guide for the drive weight.

Drive Weight Parts									
Drive Weight		Pipe Casing Size		Drive Wt. Part No.	Eyebolt (2 Req'd.) Part No.	Chains & Ring Part No.	Cold Shut Part No.	Lock Washer (2 Req'd.) Part No.	Nut (2 Req'd.) Part No.
lbs.	kg	Inches	mm						
140	63.5	2-1/2	63.5	110095-2	110024-2	310377	110026-1	90343-10	90269-10
250	113.4	2-1/2	63.5	110389-1	110024-5	310025	110026-3		
300	136.0	2-1/2	63.5	110390-2	110024-7	310025	110026-3		
350	158.8	2-1/2	63.5	110391-1	110024-8	310025	110026-3		

140 Lb. Safety Hammer

300 Lb. is Available on Request

140 lb. Safety Hammer

"One piece" hammer design provides safety, accuracy and speed for sampling operations. Hammering and bumping actions are enclosed in the hammer body for safety with the added advantage of carrying out both operations without a change of tools.

The hammer body is 3/4 inch *(19mm)* wall carbon steel tubing with the head and bumping block made from high grade carbon steel. The head is threaded and welded into the body for durability. A 50 inch *(127cm)* AW drill rod *(with replaceable coupling)* is threaded and welded into the anvil providing a 34 in *(86.4cm)* stroke. Overall length is 61 inches *(154.9cm)*. The assembly weight is 163 lbs. *(73.9kg)*.

Features:
1. Body
2. Center Rod with Impact Block
3. Guide and Bumping Closure
4. AW Coupling

Note:
300 lb. hammer available on request.

Weights and Dimensions
Gross Wt. 162 lbs. *(73.5kg)*
Compact Length 61 in. *(154.9cm)*
Extended Length 96 in. *(243.8cm)*

140 Lb. Safety Hammer

Part No.	Weight and Dimensions					
	Gross Weight		Compact Length		Extended Length	
	lbs.	kg	Inches	cm	Inches	cm
21111-3	162	73.5	61	154.9	96	243.8
Note: 300 lb. Availbale on Request.						

Boulder Buster

Cross Chopping Bit

Straight Chopping Bit

Boulder Busters

Hardened tough nose, bull point boulder busters are attached to drill rod and driven by a drive weight and cathead hoist. Boulder busters are used to break up boulders that lie ahead of the casing. Boulders may more easily shatter if a hole is drilled through the boulder prior to driving.

Boulder Busters

Size		Part No.	Rod Conn.	Used In Drive Pipe	Weight	
Inches	mm				lbs.	kg
1-7/8	47.6	110453	AW	2 in. *(AW)*	3.5	1.6
2-1/8	53.9	110587-1	AW	2-1/2 in. *(BW)*	6.0	2.7
2-5/8	66.7	110588-1	AW	3 in. *(NW)*	8.0	3.6
3-5/8	92.1	110589-2	NW	4 in. *(HW)*	17.0	7.7
5-5/8	142.9	110590-1	NW	6 in. *(SW)*	17.0	7.7

Cross Chopping Bits

Cross chopping bits are used to clear the way when driving casing into coarse gravel, small boulders, etc. They are also useful for cleaning out holes drilled in rock.

Cross Chopping Bits

Bit Face Width		Part No.	Rod Conn.	Used In Drive Pipe	Weight	
Inches	mm				lbs.	kg
1-7/8	47.6	110578-3	AW	2 in. *(AW)*	2.5	1.1
2-1/8	53.9	110579-1	AW	2-1/2 in. *(BW)*	3.0	1.4
2-5/8	66.7	110580-1	AW	3 in. *(NW)*	10.5	4.8
2-5/8	66.7	110580-5	BW	3 in. *(NW)*	7.5	3.4
3-5/8	92.1	110581-4	AW	4 in. *(HW)*	16.0	7.3
3-5/8	92.1	110581-2	NW	4 in. *(HW)*	13.0	5.9

Straight Chopping Bits

This type chopping bit is used to clean out material that has accumulated inside the casing. Water is pumped through the drill rods and out the ports in the bit to flush the material from the casing.

Straight Chopping Bits

Bit Face Width		Part No.	Rod Conn.	Used In Drive Pipe	Weight	
Inches	mm				lbs.	kg
1-7/8	47.6	110562-3	AW	2 in. *(AW)*	2.5	1.1
2-1/8	53.9	110563-1	AW	2-1/2 in. *(BW)*	3.0	1.4
2-5/8	66.7	110564-1	AW	3 in. *(NW)*	10.5	4.8
2-5/8	66.7	110564-5	BW	3 in. *(NW)*	7.5	3.4
3-5/8	92.1	110565-5	AW	4 in. *(HW)*	16.0	7.3
3-5/8	92.1	110565-2	NW	4 in. *(HW)*	13.0	5.9

3-Cone Type Roller Rock Bits						
Size		Part No.	Conn.	Type Thread	Weight	
Inches	mm				lbs.	kg
2-15/16	74.6	100538-37	NW Rod	DCDMA	3.5	1.6
3-1/8	79.4	100538-38	NW Rod	DCDMA	4.0	1.8
3-1/4	82.6	100538-35	NW Rod	DCDMA	4.5	2.0
3-1/2	88.9	100538-29	2-3/8 in.	API Reg.	5.0	2.3
3-1/2	88.9	100538-39	NW Rod	DCDMA	5.0	2.3
3-5/8	92.1	100538-28	2-3/8 in.	API Reg.	7.0	3.2
3-3/4	95.3	100538-4	2-3/8 in.	API Reg.	7.5	3.4
3-7/8	98.4	100538-5	2-3/8 in.	API Reg.	7.5	3.4
4-1/8	104.8	100538-6	2-3/8 in.	API Reg.	8.5	3.9
4-1/4	108.0	100538-7	2-3/8 in.	API Reg.	9.0	4.1
4-1/2	114.3	100538-8	2-3/8 in.	API Reg.	10.0	4.5
4-3/4	120.6	100538-9	2-7/8 in.	API Reg.	12.0	5.4

Roller Rock Bits

Conventional three cone design roller rock bits are widely used in soft to medium hard formations.

This versatile bit is used in overburden and has been quite successful in drilling rock. However, it does require a considerable amount of down pressure to successfully cut rock.

Roller rock bits are used with drilling muds or plain water. *(Bits are available on special order for use with air as a flushing/cooling medium.)* The bit is usually backed up by a heavy steel drill collar to provide the additional weight needed.

Carbide Insert Type Drag Bits					
Size		Rod Conn.	3-Wing Part No.	Weight	
Inches	mm			lb.	kg
1-7/8	47.6	EW	110685-2	2.0	0.9
2	50.8	AW	110685-4	2.0	0.9
2-1/8	54.0	AW	110685-6	2.0	0.9
2-1/4	57.2	AW	110685-8	2.0	0.9
2-3/8	60.3	AW	110685-10	3.0	1.4
2-1/2	63.5	AW	110685-12	3.0	1.4
2-5/8	66.7	AW	110685-14	3.0	1.4
2-3/4	69.9	AW	110685-16	3.0	1.4
2-7/8	73.0	AW	110685-18	3.5	1.6
3-1/4	82.6	NW	110685-26	5.0	2.3
3-1/2	88.9	NW	110685-29	5.0	2.3
3-3/4	95.3	NW	110685-32	5.5	2.5
3-3/4	95.3	2-3/8 in.	110685-32	5.5	2.5
3-3/4	95.3	API Reg.	110685-34	5.5	2.5

Carbide Insert Type Drag Bit

This type of bit, designed with heavy duty carbide inserts, is used for fast cutting of rock formations and cleaning out drive pipe and casing. Requires some down pressure especially in harder formations. Available in three-wing design.

Subs/Couplings

More Subs and Adapters
Acker manufactures a wide selection of subs and adapters not listed in our Drill Supplies Catalog that are available for quick shipment.

Rod Box to API Reg. Pin

Rod Box to API Reg. Box

Rod Box to Casing Pin

Rod Box to Rod Box

Rod Pin to Rod Pin (Coupling)

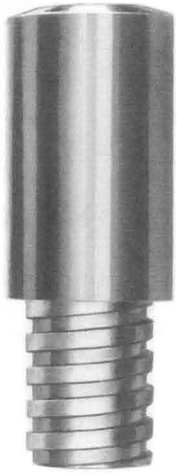

Rod Box to Rod Pin
Wireline Rods

Box	Pin	Part No.	Weight lbs.	Weight kg
AW	AWL	110043-35	1.5	0.7
AW	BWL	110043-38	2.9	1.3
NW	NWL	110047-40	3.7	1.7
NW	HWL	110047-50	8.0	3.6
AWL	AW	111179-3	1.6	0.7
AWL	BWL	—	3.2	1.5
AWL	NWL	—	5.2	2.4
BWL	NW	111191-3	5.3	2.4
NWL	NW	111192-5	5.5	2.5
NWL	HWL	111192-9	6.5	2.9

Rod Box to Rod Pin

Box	Pin	Part No.	Weight lbs.	Weight kg
EW	AW	110041-4	2.0	0.9
A	AW	110042-4	2.0	0.9
AW	A	110043-3	2.0	0.9
AW	AW	110043-4	2.0	0.9
AW	BW	110043-6	3.8	1.7
AW	NW	110043-8	6.0	2.7
BW	AW	110045-12	3.8	1.7
BW	NW	110045-8	6.8	3.1
NW	AW	110047-4	4.8	2.2
NW	BW	110047-6	4.0	1.8
NW	NW	110047-8	5.6	2.5

Rod Box to API Reg. Pin

Box	API Reg. Pin	Part No.	Weight lbs.	Weight kg
NW	2-3/8 in.	110047-12	12.0	5.4
NW	2-7/8 in.	110047-21	17.0	7.7
NW	3-1/2 in.	110047-22	22.0	10.0

Rod Box to API Reg. Box

Box	API Reg. Box	Part No.	Weight lbs.	Weight kg
AW	2-3/8 in.	110342-7	11.0	5.0
AW	2-7/8 in.	110342-8	14.0	6.4
AW	3-1/2 in.	110342-9	17.0	7.7
BW	2-3/8 in.	110344-5	11.0	5.0
BW	2-7/8 in.	110344-6	15.0	6.8
BW	3-1/2 in.	110344-7	20.0	9.1
NW	2-3/8 in.	110346-3	12.0	5.4
NW	2-7/8 in.	110346-4	17.0	7.7
NW	3-1/2 in.	110346-5	22.0	10.0

Rod Box to Rod Box

Box	Box	Part No.	Weight lbs.	Weight kg
EW	AW	110405-1	1.0	0.5
A	AW	110342-3	1.8	0.8
AW	AW	110342-10	1.9	0.9
AW	NW	110342-5	5.0	2.3
BW	NW	110344-4	3.5	1.6
N	AW	110342-6	3.8	1.7
N	NW	110345-9	4.0	1.8

Subs/Adapters
Wireline Design Drill Tools

Description	Part No.	Weight lbs.	Weight kg
AW Box to A W.L.	110043-35	2.0	0.9
BW Box to B W.L.	110045-28	3.8	1.7
NW Box to N W.L.	110047-40	4.5	1.8
NW Box to H W.L.	110047-50	4.5	2.0
NW Box to P W.L.	110047-51	4.8	2.2
(Box to Pin)			

Rod Pin to Rod Pin (Couplings)

Rod Pin to Rod Pin
(Couplings)

Pin	Pin	Part No.	Weight lbs.	Weight kg
AW	AW	110005	2.0	0.9
AW	BW	110035-6	2.8	1.3
AW	NW	110035-7	4.0	1.8
BW	BW	110006	3.0	1.4
BW	NW	110440-1	4.0	1.8
NW	NW	110007	6.0	2.7

Rod Box to Casing Pin

Rod Box	Casing Pin	Part No.	Weight lbs.	Weight kg
AW	AW	110043-27	4.0	1.8
AW	BW	110043-25	6.8	3.1
AW	NW	110043-24	12.0	5.4
BW	BW	110045-20	5.8	2.6
BW	NW	110045-23	12.0	5.4
NW	NW	110047-27	11.0	5.0
NW	HW	110047-30	12.5	5.7
AWL	AW	111174-4	3.8	1.7
BWL	BW	111191-2	6.5	2.9
NWL	NW	111192-6	10.0	4.5
HWL	HW	111396-1	15.0	6.8

Light Duty Water Swivel
Low Pressure Ball Bearing Type – With Bail

Size	Assembly Part No.	Weight		Max. Working Pressure	Static Hoisting Capacity	Inlet Size	Water Course Diameter	
		lbs.	kg				Inches	mm
AW	21023-18	10.0	4.5	300 p.s.i.	3,000 lbs.	3/4 in. NPT	5/8	15.9

Light Duty Water Swivel

Acker low pressure water swivels are designed for general field conditions and provide good thrust at high or low speeds. Packing arrangements help insure against leakage. A built-in bail aids in handling. Note: For long strings of tools and high pressures, Acker heavy duty swivels are recommended.

Repair Kit Contents

Item	Description	Part No.	Quantity
2	Seal	90364-59	1
4	Retaining Ring	90201-168	1
8	Bearings	090072-106	2
9	Seal	90363-171	1

Sub Adapters

Description	Part No.	Weight	
		lbs.	kg
AW Box to AWL Wire Line Pin	110043-35	2.0	9.0

Note: Additional adapters available.

Spare Parts

Item	Description	Size AW Part No.
1	Gooseneck	110300-1
2	Seal	90364-59
3	Spacer	150035-113
4	Retaining Ring	90201-168
5	Spacer	110067
6	Body	110063
7	Grease Fitting	90359-7
8	Bearing *(2 Req'd.)*	090072-106
9	Seal	90363-171
10	Locknut	90400-06
11	Lockwasher	90399-06
12	Spacer *(Outer)*	110065
13	Spacer *(Inner)*	110066
14	Stem	110680
15	Sub	N.A

Water Swivel Repair Kit

Description	Part No.	Weight	
		lbs.	kg
AW	40033	1.0	0.45

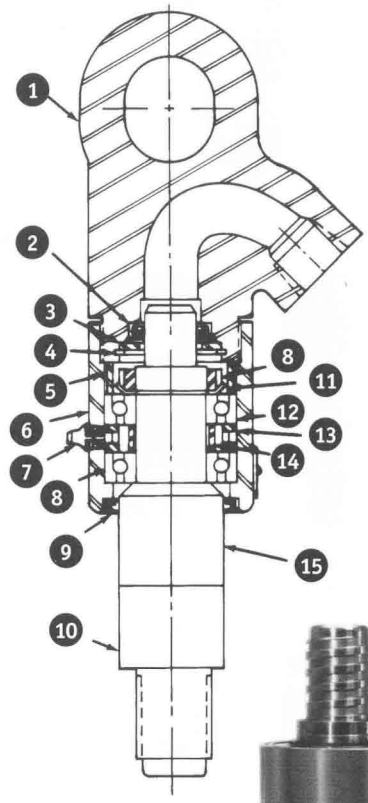

Light Duty Water Swivel

Side Feed Water Swivel – Ball Bearing Type
Maximum Working Pressure – 150 p.s.i.

Size	Part No.	Water Course Diameter		Hose Connection	Weight	
		Inches	mm		lbs.	kg
EW	21059-2	7/16	11.1	3/4 in. NPT	11.0	5.0
A	21059-3	9/16	14.8	3/4 in. NPT	13.0	5.9
AW	21059-4	5/8	15.9	3/4 in. NPT	13.0	5.9
B	21060-1	11/16	17.4	1-1/4 in. NPT	15.0	6.8
BW	21060-2	3/4	19.0	1-1/4 in. NPT	15.0	6.8
N	21060-3	1	25.4	1-1/4 in. NPT	18.0	8.2
NW	21060-4	1-3/8	34.9	1-1/4 in. NPT	18.0	8.2

Side Feed Water Swivel

Side Feed Water Swivel – Spare Parts

Size	Description *(Item)*						
	1	2	3	4	5	6	7
	Stem Part No.	Body Part No.	Bearing *(2 Req'd.)* Part No.	O-Ring *(2 Req'd.)* Part No.	Ring *(2 Req'd.)* Part No.	Nipple Part No.	Grease Fitting Part No.
EW	110456	110454	90071-109	90759-329	90202-177	90313-24	90359-7
A	110457	110454	90071-109	90759-329	90202-177	90313-24	90359-7
AW	110458	110454	90071-109	90759-329	90202-177	90313-24	90359-7
B	110460	110459	90071-114	90759-336	90202-275	90313-55	90359-7
BW	110461	110459	90071-114	90759-336	90202-275	90313-55	90359-7
N	110462	110459	90071-114	90759-336	90202-275	90313-55	90359-7
NW	110463	110459	90071-114	90759-336	90202-275	90313-55	90359-7

Additional Connections Available.

Side Feed Water Swivel

For drill units not equipped with a hollow spindle, the Side Feed Swivel adapts to the bottom of the Kelly. Water is fed through a side port and through the drill rods. The swivel is ideal for high or low speed rotation.

Heavy Duty Water Swivel

A water swivel connects to the top of the drill rods and provides a water tight rotating joint that allows water under pressure to be pumped to the bottom of the drill string while the drill tools are rotating. Swivels are designed to handle a variety of drilling requirements. Lifting capacities and pressure ratings should be considered when making a selection.

The Acker heavy-duty water swivel is designed for deep hole drilling using heavy rods and either fresh water or drilling muds at high pressures. The swivel is easy to service with a grease fitting for internal lubrication. *(The lifting bail is part of the assembly.)*

Heavy Duty Water Swivel
High Pressure Ball Bearing Type – With Bail

Size	Assembly Part No.	Weight		Max. Working Pressure	Static Hoisting Capacity	Inlet Size	Water Course Diameter	
		lbs.	kg				Inches	mm
BW	21066-2	30.0	13.6	650 p.s.i.	10,000 lbs.	1-1/4 in. NPT	3/4	19.0
NW	21066-6	30.0	13.6	650 p.s.i.	10,000 lbs.	1-1/4 in. NPT	1-3/8	34.9

Sub Adapters

Description	Part No.	Weight	
		lbs.	kg
NW Box to B Wire Line Pin	110047-39	4.0	1.8
NW Box to N Wire Line Pin	110047-40	4.0	1.8
NW Box to H Wire Line Pin	110047-50	4.0	1.8
NW Box to P Wire Line Pin	110047-51	4.0	1.8

Water Swivel Repair Kit

Description	Part No.	Weight	
		lbs.	kg
BW	40041-0	4.0	1.8
NW	40041-0	4.0	1.8

Repair Kit Contents

Item	Description	Part No.	Quantity
4	Packing Set	150045-13	1
6	Retaining Ring	90201-250	1
7	Duplex Bearing	90849-1	1
8	Retaining Ring	90202-275	1
9	Seal	90364-251	1
10	Retaining Ring	90201-375	1
15	Gasket	110299-0	1

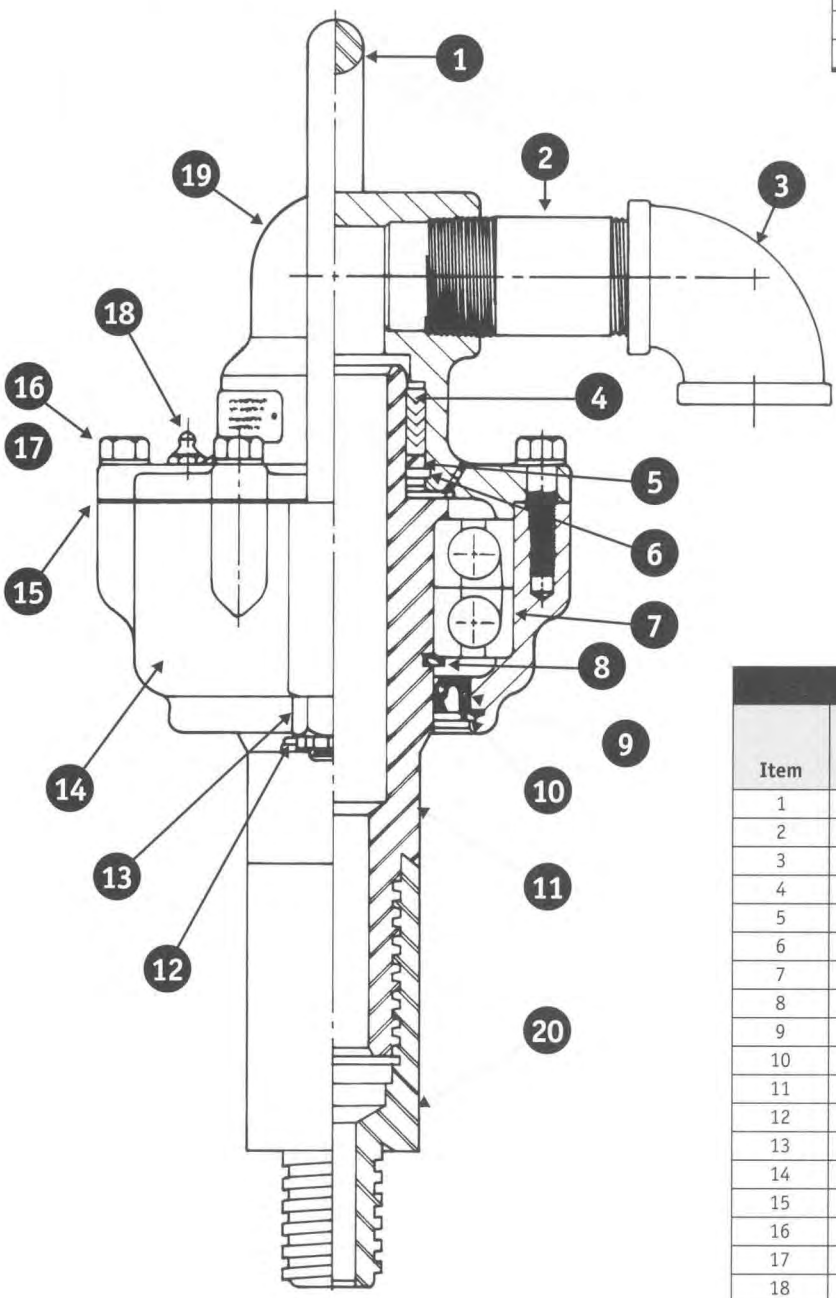

Spare Parts

Item	Description	Size	
		BW Part No.	NW Part No.
1	Ball	110078	110078
2	Nipple	90313-119	90313-119
3	Elbow	90411-22	90411-22
4	Packing	150045-13	150045-13
5	Washer	110573	110573
6	Retaining Ring	90201-250	90201-250
7	Duplex Ring	90849-1	90849-1
8	Retaining Ring	90202-275	90202-275
9	Seal	90364-251	90364-251
10	Retaining Ring	90201-375	90201-375
11	Stem	110536	110572
12	Cotter Pin	90456-20	90456-20
13	Castle Nut	90299-8	90299-8
14	Body	110075	110075
15	Gasket	110299	110299
16	Bolt	90214-115	90214-115
17	Lockwasher	90343-6	90343-6
18	Grease Fitting	90359-1	90359-1
19	Top Cap	110074	110074
20	Sub	110046-16	N.A.

Safety Foot Clamps

Safety Foot Clamps are utilized with replaceable carbide steel jaws to hold the drill string suspended in the bore hole. Jaws are available for a wide range of sizes.

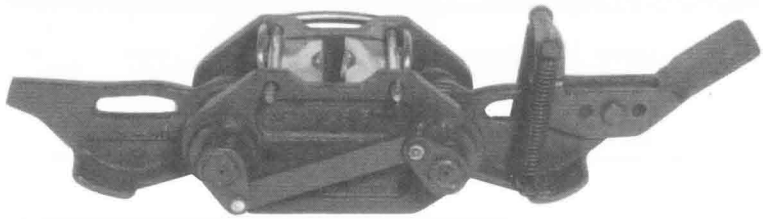

Heavy Duty Foot Clamp

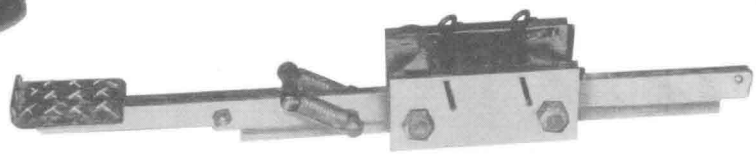

Standard Duty Foot Clamp

Carbide Insert Jaws for Safety Foot Clamps

Size	Standard Duty (2 Req'd.)			Heavy Duty (2 Req'd.)		
	Part No.	Weight lbs.	Weight kg	Part No.	Weight lbs.	Weight kg
EW	310891-6	1.0	0.45	—	—	—
AW	310891-4	1.5	0.68	111232-13	26.9	12.2
BW	310891-2	1.5	0.68	111232-14	21.0	9.5
NW	310891-7	1.5	0.68	111232-12	19.5	8.8
AWL	310891-4	1.5	0.68	111232-13	26.9	12.9
BWL	310891-12	1.5	0.68	111232-14	21.0	9.5
NWL	310891-11	1.5	0.68	111232-16	17.5	7.9
HWL	—	—	—	111232-17	13.5	6.1
86mm	—	—	—	111232-9	16.0	7.3
101mm	—	—	—	111232-10	12.5	5.7
108mm	—	—	—	111232-20	12.5	5.7
116mm	—	—	—	111232-11	10.5	4.8
EW Casing	310891-9	1.0	0.45	—	—	—
AW Casing	310891-8	1.0	0.45	111232-21	20.5	9.3
BW Casing	310891-10	1.0	0.45	111232-22	16.0	7.3
NW Casing	—	—	—	111232-15	14.9	6.7
HW Casing	—	—	—	111232-8	11.5	5.2

Safety Foot Clamp (Less Jaws)

Description	Part No.	Weight lbs.	Weight kg
Standard Duty	21027-20	49.0	22.2
Heavy Duty	21128-10	53.0	24.0

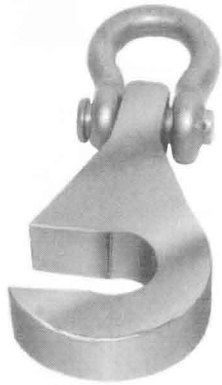

Open Style Pull Plate

Closed Style Pull Plate

Pulling Plates

Size	Open Type			Closed Type		
	Part No.	Weight lbs.	Weight kg	Part No.	Weight lbs.	Weight kg
EW	111181-11	6.0	2.7	111181-3	7.0	3.2
AW	111181-12	6.0	2.7	111181-4	7.0	3.2
BW	111181-14	9.0	4.1	111181-6	10.0	4.5
NW	111181-16	10.5	4.8	111181-8	12.0	5.4

Pulling Plates

Useful tool for removing drill rods from moderate depths. A hoisting rope is attached to the ring while the rod is slid through the hole in the plate. An upward pull on the rope tilts the plate and holds the rod securely.

Open Type Holding Iron

Closed Type Holding Iron

Holding Irons

Size	Open Type Part No.	Closed Type Part No.	Weight lbs.	Weight kg
EW	110638-2	110637-2	11.0	5.0
AW	310638-4	110637-4	11.0	5.0
BW	310640	110639	11.0	5.0
NW	310640-2	110639-2	18.0	8.2

Holding Irons

Open and closed holding irons have been used for many years and are simple but effective. Irons hold drill rods firmly when lowering or hoisting.

Hoisting Plugs

This ball bearing type swivel is for hoisting and lowering drill rods and casings. The swivel design permits turning the rods or casings while they're suspended.

Hoisting Plug Ball Bearing TYpe

Hoisting Plugs				
Rod Size	Part No.	Weight		Rated Static Capacity
		lbs.	kg	
EW	21055-8	5.5	2.5	5 Tons
AW	21055-2	6.5	2.9	5 Tons
BW	21055-10	15.5	7.0	7.5 Tons
NW	21055-4	16.5	7.5	7.5 Tons
AWJ	21055-35	6.5	2.9	5 Tons
NWJ	21055-36	16.5	7.5	7.5 Tons

Sheaves

Heavy duty single sheave wheel *(Style A)* is for use with 1-inch manila rope. Sheave is lubricated through a grease fitting. Can be furnished with a shackle or safety hook.

Double sheave type *(Style B)* handles both wire and manila rope.

Large size, heavy duty sheave *(Style C)* is for use with wire or manila rope. Ideal for use with a 20 ft. tripod telescopic derrick.

Heavy Duty Single Sheave Style A

Sheaves						
Part No.	Sheave Diameter *(Inches)*	No. Of Sheaves	Wire Rope Size *(Inches)*	Manila Rope Size *(Inches)*	Weight	
					lbs.	kg
25031-3	12	2	3/8	1	85.0	38.5
25031-10	12	1	3/8	—	62.0	28.1
25031-18	6-1/4	1	—	1	13.5	6.1
25031-19	12	2	1/2	1	53.0	24.0
25031-24	12	2	1/2	1	85.0	38.5

Clevis and Bolt

Clevis and Bolts			
Size *(Inches)*	Part No.	Weight	
		lbs.	kg
3/4	25123-1	4.5	2.0
1	25123-3	5.0	2.3
1-1/4	—	24.0	10.9
1-1/2	—	44.0	19.9

Clevis and Bolts

The clevis acts as a hanger for the sheave wheel, while the bolt connects and holds together the legs of the steel or wood derrick.

Safety Hooks

The bail type safety hook is attached to the hoisting cable for connection to hoisting plugs, lifting bars, water swivels, etc. Safety hooks come with a safety latch kit. Extra latch kits may be ordered separately.

Safety Hooks

Safety Hooks – Swivel Type For Wire and Manila Rope					
Size *(Inches)*	Capacity *(Tons)*	Part No.	Weight		Safety Latch Kit Assembly Part No.
			lbs.	kg	
1/4 Wire	1.5	90351-1	1.3	0.59	91090-3
5/16 Wire	3.0	90351-2	2.5	1.13	91090-4
3/8 Wire	3.0	90351-2	2.5	1.13	91090-4
1/2 Wire	4.5	90351-3	4.5	2.0	91090-5
5/8 Wire	7.0	90351-4	9.3	4.22	—
3/4 Manila*	3.0	90351-2	2.5	1.13	91090-4
1 Manila*	4.5	90351-3	4.5	2.0	91090-4
**Hook ratings exceed Manila Rope Ratings approx. 6:1.*					

Circle Wrenches				
Size	Inner Tube Part No.	Outer Tube Part No.	Weight	
			lbs.	kg
AWL/AWL	90842-25	90842-24	8.4	3.8
BWL/AWL	90842-27	90842-26	8.8	4.0
NWL/AWL	90842-29	90842-28	9.7	4.4
HWL/AWL	90842-31	90842-30	12.6	5.4
PWL/AWL	90842-33	90842-32	16.4	7.4
AWG	90842-36	—	8.4	3.8
BWG	90842-35	—	8.8	4.0
NWG	90842-34	—	9.7	4.4
HWG	90842-37	—	12.6	5.4

Circle Wrench

Circle Wrenches

Designed for handling wire line rods, circle wrenches help prevent gouges and damage to the rods. Circle wrenches are used in pairs, one for the inner tube and one for the outer tube.

Chain Tong

This chain tong is used to couple and uncouple large diameter pipe and casing.

Chain Tongs			
Size	Part No.	Weight	
		lbs.	kg
1/4 in. to 2-1/2 in.	90841-3	22.0	10.0
3/4 in. to 4 in.	90841-4	24.0	10.9
1 in. to 6 in.	90841-5	30.0	13.6
1-1/2 in. to 8 in.	90841-6	32.0	14.5
2 in. to 12 in.	90841-7	34.0	15.4

Pipe Wrenches

Pipe wrenches are handy for coupling pipe, casing, rods and pump connections.

Pipe Wrenches			
Size *(Inches)*	Part No.	Weight	
		lbs.	kg
6	90857-1	1.0	0.45
8	90857-2	1.0	0.45
10	90857-3	2.0	0.91
12	90857-4	2.5	1.13
14	90857-5	3.5	1.59
18	90857-6	6.0	2.72
24	90857-7	10.0	4.54
36	90857-8	20.0	9.1
48	90857-9	35.0	15.9
60	90857-10	50.0	22.7

Pipe Wrench

Fishing and Recovery Tools

Recovery Tools are essential at every drill site. Listed below are the most commonly used tools. Taps for left-hand strings of drill rods are available on request.

Fishing Spears
For Miscellaneous Broken Tools

Size	Thread Head Connection	Part No.	Weight	
			lbs.	kg
AW	AW	110058-16	3.0	1.4
BW	BW	110058-15	5.0	2.3
NW	NW	110058-17	6.0	2.7

Fishing Spear

Fishing Spears

A fishing spear is usually the first recovery tool employed when tools are broken off in the bore hole. The spear screws directly on the drill rods and will withstand light driving to aid in spearing the last tool. Fishing spears are easy to easy to break loose if the drill tools cannot be recovered.

Bell Type Recovery Tap

Pin Type Recovery Tap

Heavy Duty Casing Retriever

Recovery Taps (Pin & Bell Types)

This type of recovery tool is designed to slip over broken tools or spear inside of rod and barrel parts.

Heavy Duty Casing Retriever

The casing retriever is attached to the drill rod and carefully lowered into the top portion of the lost section. Withdrawing the retriever causes the sliding jaws to wedge securely against the inner wall of the casing. The retriever is removed from the casing by pushing the assembly out the bottom end. If the retriever becomes stuck in the hole, the unit is designed to break off at the replaceable nose.

Recovery Taps —Bell Type*
For Rods and Couplings

Size	R.H. Thread Head Connection	Part No.	Weight	
			lbs.	kg
AW	AW	110600-11†	3.0	1.4
BW	BW	110600-2	3.0	1.4
NW	NW	110600-4	7.0	3.2

**Left Hand Threads Available on Request.*
†For use only in BW or NW holes.

Bit Recovery Taps — Pin Type
For Bits and Shells

Size	R.H. Thread Head Connection	Part No.	Weight	
			lbs.	kg
AWG	AW	110595-56	3.9	1.8
BWG	BW	110595-23	7.5	3.4
NWG	NW	110595-60	14.0	6.4
AWL	AWL	110595-71	3.9	1.8
BWL	BWL	110595-67	7.5	3.4
NWL	NWL	110595-68	14.0	6.4

Recovery Taps —Pin Type*
For Rods, Couplings and Core Barrels

Size	R.H. Thread Head Connection	Part No.	Weight	
			lbs.	kg
AW	AW	110595-4	2.4	1.1
BW	BW	110595-6	4.7	2.1
NW	NW	110595-8	5.5	2.5
AWL	AWL	110595-69	1.4	0.6
BWL	BWL	110595-63	2.4	1.1
NWL	NWL	110595-64	4.7	2.1
HWL	HWL	110595-82	5.5	2.5

**Left Hand Threads Available on Request.*

Casing Recovery Taps — Pin Type
For Rods, Couplings and Core Barrels

Size	R.H. Thread Head Connection	Part No.	Weight	
			lbs.	kg
AX/AW	AWL	110595-70	4.2	1.9
BX/BW	BWL	110595-65	7.0	3.2
NX/NW	NWL	110595-66	10.0	4.5
HW	HWL	110595-95	14.0	6.4
AX/AW	AW	110595-14	4.6	2.1
BX/BW	BW	110595-15	7.2	3.3
NX/NW	NW	110595-16	11.0	5.0

Casing Retriever Assembly

Casing Size Used		Part No.	Drill Rod Box	Weight	
Inches	mm			lbs.	kg
2-1/2	63.5	21037-5	AW	14.0	6.4
3	76.2	21038-7	BW	23.0	10.4
3-1/2	88.9	21039-8	NW	34.0	15.4
4	101.6	21040-16	NW	46.0	20.9

Drill Supplies

Clean Out Taps

Taps are used to straighten threads on used or damaged drill rods and core barrels. Clean out taps are made from heat treated, quality steel and are designed for all size drill rod threads.

Clean Out Taps Drill Rod Box Threads			
Size	Part No.	Weight	
		lbs.	kg
AW	21054-5	2.0	0.9
BW	21054-7	3.0	1.4
NW	21054-9	5.0	2.3
N3 TPI	21054-11	3.0	1.4
Additional Sizes Available			

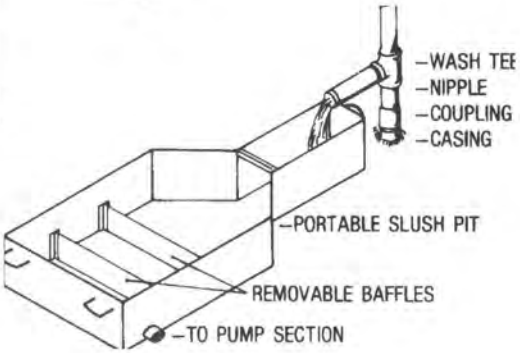

Portable Slush Pit										
Capacity		Part No.	Length		Width		Height		Weight	
Gal.	L		in.	cm	in.	cm	in.	cm	lbs.	kg
75	284	310715	72	183.9	32	81.3	10	25.4	150	68.0

Portable Slush Pit

A portable slush pit eliminates digging earthen pits at drill sites. Ther tank is designed with baffles, handles and pump suction fittings. The pit is extremely handy when drilling mud, collecting wash boring samples and setting drill water for recirculation.

Marsh Funnel/Measuring Cup			
Description	Part No.	Weight	
		lbs.	kg
Marsh Funnel *(Viscosimeter)*	110894	1.5	0.68
Measuring Cup *(1000cc)*	110895	1.0	0.45

Marsh Funnel/ Measuring Cup

Simple viscometer is used to check the viscosity of the drilling muds. The funnel is filled to the screen with a slurry or mud and the time is recorded to empty the funnel. The elapsed time is stated as, for example, a 60 or 70 seconds mud. The funnel has a 1000cc capacity.

Cotton Wicking		
Part No.	Weight	
	oz.	g
110717	2.0	56.7

Cotton Wicking

Cotton wicking is cut in short pieces and applied at each joint of a string of tools. It helps to seal the rods and prevents loss of circulating water. Cotton wicking should not be used with wire line drill rods. When ordering—advise the number of balls desired.

Rod Wipers

Rod wipers are used to clean drill rods as they are removed from the drill hole. Wipers are ideal when muds are used.

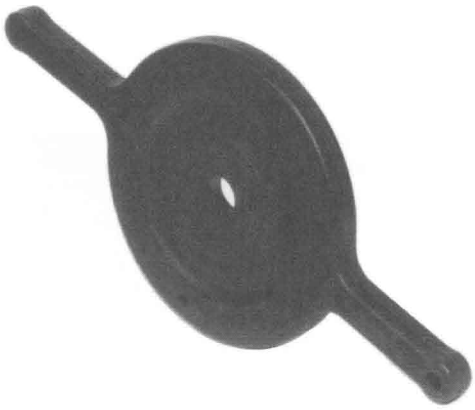

Rod Wipers								
	With Handle					Without Handle		
Rod Size	O.D.		Part No.	Weight		Part No.	Weight	
	in.	mm		lbs.	kg		lbs.	kg
AW	1-3/4	44.45	90888-2	6.5	2.9	90889-2	8.0	3.6
BW	2-1/8	53.98	90888-4	6.5	2.9	90889-4	8.0	3.6
NW	2-5/8	66.68	90888-6	6.5	2.9	90889-6	8.0	3.6
HW	3-1/2	88.9	90888-8	6.5	2.9	90889-8	8.0	3.6

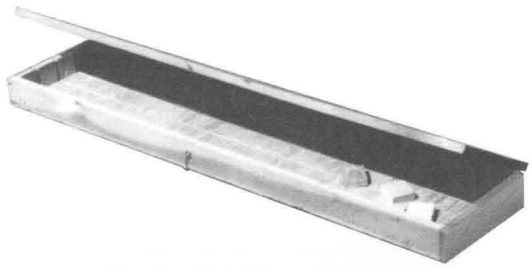

Core Boxes

Core boxes are designed to carry and store cores in an orderly fashion. The boxes are made as short as possible to accommodate carrying in an automobile or truck and light enough to be easily hand carried. Removable spacers are provided to separate sections of core. Lids are hinged and include a simple latch.

Wooden Core Boxes											
Core Size	Part No.	Core Capacity		Length		Width		Depth		Weight	
		ft.	m	ft.	m	in.	cm	in.	mm	lbs.	kg
EWG	21085-3	32	9.8	4.0	1.2	9-5/8	24.4	1-3/4	44.5	25.0	11.3
AWG/AWL	21085-4	24	7.3	4.0	1.2	9-5/8	24.4	2	50.8	25.0	11.3
BWG/BWL	21085-6	20	6.1	4.0	1.2	10-3/4	27.3	2	50.8	30.0	13.6
NWG/NWL	21085-7	16	4.9	4.0	1.2	11	27.9	2-1/4	57.2	30.0	13.6

Penetrometer Points

Penetrometer points are available in a variety of sizes. They are useful for locating bedrock and preparing a profile of underground rock formations. An adapter coupling connects directly to any size drill rod and permits the detachable point to be driven to refusal. The diameter of the penetrometer point is larger than the diameter of the drill rod to aid in withdrawing the rods.

Penetrometer Assembly and Extra Parts							
Rod Size	Assembly Part No.	Weight		Point Diameter		Point Only Part No.	Coupling Only Part No.
		lbs.	kg	Inches	mm		
EW	21078-10	1.0	0.45	2	50.8	110870	110711-9
AW	210078-12	1.5	0.68	2	50.8	110870	110711-10
BW	21078-14	1.5	0.68	2-3/4	69.9	110709-7	110711-11
NW	21078-16	2.0	0.90	2-3/4	69.9	110709-7	110711-12
E	21078-9	1.0	0.45	2	50.8	110870	110711-13
A	21078-11	1.5	0.68	2	50.8	110870	110711-14
B	21078-13	1.5	0.68	2-3/4	69.9	110709-7	110711-15
N	21078-15	2.0	0.90	2-3/4	69.9	110709-7	110711-16
AWJ	21078-20	1.5	0.68	2	50.8	110870	110711-20

Specifications for Drill Rods and Casings

Special and nonstandard Rods, Casings and Couplings are manufactured by Acker Drill Co., Inc. on request. In addition, Acker offers a complete range of metric rods and casings.

Specifications: Drill Rods and Couplings

Size	O.D.		I.D.		Threads Per Inch	Weight		Coupling I.D.		Coupling Wt.	
	Inches	mm	Inches	mm		lbs./ft.	kg/m	Inches	mm	lbs.	kg
EW	1-3/8	34.9	15/16	23.8	3	2.8	4.2	7/16	11.1	1.0	0.45
AW	1-3/4	44.4	1-1/4	31.8	3	4.3	6.4	5/8	15.8	2.0	0.90
BW	2-1/8	53.9	1-3/4	44.4	3	4.3	6.4	3/4	19.0	3.5	1.38
NW	2-5/8	66.6	2-1/4	57.1	3	5.5	8.2	1-3/8	34.9	5.5	2.50
HW	3-1/2	88.9	3-1/16	77.7	3	8.8	13.1	2-3/8	60.3	7.6	3.45
E	1-5/16	33.3	7/8	22.2	3	2.7	4.0	7/16	11.1	1.0	0.45
A	1-5/8	41.3	1-1/8	28.6	3	3.8	5.7	9/16	14.3	2.0	0.90
B	1-7/8	47.6	1-1/4	31.7	5	3.6	5.4	5/8	15.9	2.5	1.13
N	2-3/8	60.3	2	50.8	4	5.0	7.4	1	25.4	4.0	1.82
N3 TPI	2-3/8	60.3	2	50.8	3	5.0	7.4	1	25.4	4.0	1.82

Note: Specifications (O.D., I.D. and Weight) will depend on parallel or upset type of material.

"W" Design Flush Joint Casings

Size	O.D.		I.D.		Threads	Weight	
	Inches	mm	Inches	mm	Per Inch	lbs./ft	kg/m
EW	1-13/16	46.0	1-1/2	38.1	4	2.8	4.2
AW	2-1/4	57.1	1-29/32	48.4	4	3.9	5.8
BW	2-7/8	73.0	2-3/8	60.3	4	7.0	10.4
NW	3-1/2	88.9	3	76.2	4	8.4	12.5
HW	4-1/2	114.3	4	101.6	4	11.7	17.4

Specifications: Wire Line Drill Rods

Size*	Rod O.D.		Rod I.D.		Coupling O.D.		Coupling I.D.		Threads Per Inch
	in.	mm	in.	mm	in.	mm	in.	mm	
AWL	1-3/4	44.5	1-3/8	34.9	—	—	—	—	4
BWL	2-3/16	55.6	1-13/16	46.0	—	—	—	—	3
NWL	2-3/4	69.9	2-3/8	60.3	—	—	—	—	3
HWL	3-1/2	88.9	3-1/16	77.8	—	—	—	—	3
PWL	4-1/2	114.3	4-1/16	103.2	4-5/8	117.5	4-1/16	103.2	3

Single Tube "WG" Design Core Barrels

Single tube core barrels are the simplest, least expensive and most rugged of the core barrel family and consist of a head section, core recovery tube, reamer shell, and cutting bit with core lifter. All head connections are "W" Design drill rod threads.

In operation, water flows through the head, around the core and directly out of the waterways in the bit. Recommended uses include coring in homogeneous hard rock, *(where the core does not wash away or crumble easily)* and penetrating rock layers above the strata where high core recovery is not essential. Single tube barrels are often used as a started barrel when beginning coring operations.

Core Barrel — Nominal Dimensions								
Size	Hole Diameter		Core Diameter		Tube O.D.		Tube I.D.	
	Inches	mm	Inches	mm	Inches	mm	Inches	mm
EWG	1-1/2	38.1	7/8	21.5	1-7/16	36.5	15/16	23.8
AWG	1-7/8	47.6	1-1/8	30.0	1-13/16	46.0	1-9/32	32.5
BWG	2-3/8	60.3	1-5/8	42.0	2-9/32	57.9	1-3/4	44.04
NWG	2-15/16	71.4	2-1/8	54.7	2-29/32	73.8	2-1/4	57.01
HWG	3-15/16	100.0	3	76.2	3-3/4	95.2	3-1/8	79.3

Single Tube Core Barrels

Assembly Includes: Core Barrel Head, Barrel and Thread Protector.

Size	2 Ft. *(609 m)*			5 Ft. *(1.524 m)*			10 Ft. *(3.048 m)*		
	Part No.	Lbs.	kg	Part No.	Lbs.	kg	Part No.	Lbs.	kg
EWG	20699-1	6.0	2.7	20699-2	15.0	7.0	20699-3	30	13.5
AWG	20700-1	8.0	3.7	20700-2	20.0	9.1	20700-3	40	18.0
BWG	20701-1	11.0	4.9	20701-2	30.1	14.0	20701-3	60	27.0
NWG	20702-1	14.0	6.2	20702-2	43.0	19.0	20702-3	86	38.0
HWG	20703-1	16.0	7.2	20703-2	46.0	21.0	20703-3	92	42.0

Spare Parts

For Single Tube Core Barrels

Description	EWG Part No.	Weight		AWG Part No.	Weight	
		Lbs.	kg		Lbs.	kg
"W" Head	101589	1.0	0.45	101590	1.5	0.68
Barrel — 2 Ft.	101573-1	7.0	3.17	101574-1	9.0	4.07
Barrel — 5 Ft.	101573-2	17.0	7.70	101574-2	19.0	8.60
Barrel — 10 Ft.	101573-3	34.0	15.4	101574-3	38.0	17.2
Thread Protector	101645	*	*	101646	*	*
Optional Parts						
Blank Reaming Shell	101584	*	*	101585	1.0	0.45
Core Lifter	100164	*	*	100193	*	*
Blank Bit	101637	*	*	101638	*	*

** Less than one pound or .45 kg.*

Spare Parts

For Single Tube Core Barrels

Size:	BWG			NWG			HWG		
Description	Part No.	Weight		Part No.	Weight		Part No.	Weight	
		Lbs.	kg		lbs.	kg		Lbs.	kg
"W" Head	101591	2.5	1.13	101592	3.0	1.35	101593	3.5	1.58
Barrel — 2 Ft.	101575-1	14.0	6.34	1011576-1	16.0	7.24	101577-1	18.0	8.15
Barrel — 5 Ft.	101575-2	24.0	10.8	101576-2	26.0	11.7	101577-2	28.0	12.6
Barrel — 10 Ft.	101573-3	48.0	21.7	101576-3	52.0	23.5	101577-3	56.0	25.3
Thread Protector	101647	*	*	101648	*	*	—	—	—
Optional									
Blank Reaming Shell	101586	2.0	0.90	101587	2.0	0.90	101588	2.5	1.13
Core Lifter	100211	*	*	100243	*	*	101596	*	*
Blank Bit	101639	1.0	0.45	101640	1.0	0.45	101594	*	*

** Less than one pound or .45 kg.*

STANDARD

Core Barrels

Swivel Type Double Tube "WG" Core Barrels

The advantage of the swivel barrel over the rigid type double tube core barrel is that the inner tube is mounted on antifriction bearings and remains virtually stationary while the outer barrel and bit rotate. There is less tendency to grind core with swivel type barrels. It is popular over the range of standard Diamond Core Drill manufacturers Association sizes for "EWG" through "HWG". All connections are "W" Design drill rod threads.

The swivel type, double tube core barrel is the generally accepted tool for obtaining core in fractured, broken formations. It is fairly rugged, and gives high recovery when used properly. All core barrel heads are hard faced.

"WG" Core Barrel — Nominal Dimensions

Size	Hole Diameter		Core Diameter		Outer Tube O.D.		Outer Tube I.D.		Inner Tube O.D.		Inner Tube I.D.	
	Inches	mm	Inches	mm	Inches	mm	Inches	mm	Inches	mm	Inches	mm
EWG	1-1/2	38.1	7/8	21.5	1-7/16	36.5	1-3/16	30.2	1-1/16	27.0	15/16	23.8
AWG	1-7/8	47.6	1-1/8	30.0	1-13/16	46.0	1-17/32	38.9	1-13/32	35.7	1-1/4	31.7
BWG	2-3/8	60.3	1-5/8	42.0	2-9/32	57.9	2	57.9	1-7/8	47.6	1-23/32	43.6
NWG	2-15/16	71.4	2-1/8	54.7	2-29/32	73.8	2-5/8	73.8	2-1/2	63.5	2-1/4	57.1
HWG	3-29/32	99.2	3	76.2	3-3/4	95.3	3-3/8	85.7	3-1/4	82.6	3-1/16	77.8

Swivel Type — "WG" Double Tube Core Barrels

Hard Face Heads — For Abrasive Formatiions

Assembly Includes Core Barrel Head, Outer Tube, Inner Tube and Thread Protector — With Chrome Plated Outer Tube

Size	5 Ft. *(1.52 M)*			10 Ft. *(3.048)*			5 Ft. *(1.52M)*			10 Ft. *(3.048M)*		
	Part No.	Weight Lbs.	Weight kg	Part No.	Weight Lbs.	Weight kg.	Part No.	Weight Lbs.	Weight kg	Part No.	Weight Lbs.	Weight kg
EWG	20711-11	15.0	6.8	20711-12	30.0	13.6	20711-50	15.0	6.8	20711-51	30.0	13.6
AWG	20712-11	25.0	11.3	201712-12	50.0	22.6	20712-50	25.0	11.3	20712-50	50.0	22.6
BWG	20713-11	35.0	15.8	20713-12	60.0	27.2	20713-50	35.0	15.8	20713-51	60.0	27.2
NWG	20714-11	55.0	24.9	20714-12	105.0	47.5	20714-50	55.0	24.9	20714-51	150.0	47.5
HWG	20715-8	76.4	34.7	20715-7	145.9	66.2	—	—	—	—	—	—

Spare Parts — Swivel Type "WG" Double Tube Core Barrel

Description	EWG			AWG			BWG			NWG			HWG		
	Part No.	Weight Lbs.	Weight kg	Part No.	Weight Lbs.	Weight kg	Part No.	Weight Lbs.	Weight kg	Part No.	Weight Lbs.	Weight kg	Part No.	Weight Lbs.	Weight kg
Head Assembly "W"	20398-5	1.8	.81	20399-5	5.0	2.3	20400-8	8.8	4.0	20401-6	15.0	6.8	20716-1	20.8	9.4
Outer Head "W"	300130	1.0	.45	300224	2.8	1.2	300219	6.0	2.7	300094	8.8	3.9	301631	12.2	5.5
Inner Head	100098	*	*	100066	1.0	.45	100002	1.0	.45	100034	2.0	.90	101630	2.8	1.3
Thrust Bearing	90000-25	*	*	90000-4	*	*	90000-4	*	*	90000-8	1.0	.45	90077-206	1.4	.63
Bushing	150035-5†	*	*	100004	*	*	100004	*	*	100036	1.0	.45	NA	—	—
	150035-6†	*	*	—	—	—	—	—	—	—	—	—	—	—	—
Locknut	100099	*	*	100003	*	*	100003	*	*	100035	*	*	90400-06	*	*
Rollpin	90107-105	*	*	90107-105	*	*	90107-105	*	*	90107-251	*	*	NA	—	—
Outer Tube 5 Ft.	101602-2	9.0	4.0	101603-2	12.0	5.4	101604-2	1.8	.81	101605-2	23.0	10.4	101606-7	31.9	14.5
Outer Tube 10 Ft.	101602-3	18.0	8.2	101603-3	23.8	10.8	101604-3	35.0	15.8	101605-3	46.0	20.8	101606-6	63.9	29.0
Inner Tube 5 Ft.	301617-2	4.0	1.8	301618-2	8.0	3.6	301619-2	8.0	3.6	301620-2	17.0	7.7	301621-7	23.6	10.7
Inner Tube 10 Ft.	301617-3	8.0	3.6	301618-3	14.0	6.4	301619-3	16.0	7.24	301620-3	34.0	15.4	301621-6	47.2	21.4
Thread Protector	101658	*	*	101659	*	*	101660	*	*	101661	*	*	101971-2	*	*
Optional															
Core Litter	100164	*	*	100193	*	*	100211	*	*	100243	*	*	101596	*	*
Blank Bit	101637	*	*	101638	*	*	101639	*	*	101640	1.0	.45	101594	1.4	.63
Blank Reaming Shell	101597	*	*	101598	*	*	101599	*	*	101600	*	*	101601	*	*
Roller	100115	*	*	100082	*	*	100020	1.0	.45	100053	1.8	.81	101628	2.5	1.1
Ext. Coupling "W"	100114-5	2.8	1.3	100081	3.0	1.4	100019	5.0	2.2	100052	10.0	4.5	101627	13.9	6.3

** Less than one pound or .45 kg. Note: † Steel and Bronze Spacers Required for EWG Only.*

Spare Parts for Swivel Type Double Tube Core Barrel

For Abrasive Formations — 18" of Reaming Shell End *(With Chrome Plated Outer Tube)*

Description	EWG			AWG			BWG			NWG			HWG		
	Part No.	Weight Lbs.	Weight kg	Part No.	Weight Lbs.	Weight kg	Part No.	Weight Lbs.	Weight kg	Part No.	Weight Lbs.	Weight kg	Part No.	Weight Lbs.	Weight kg
Outer Tube 5 Ft.	101663	9.0	4.0	101665	12.0	5.4	101667	18.0	8.1	101669	23.0	10.4	—	—	—
Outer Tube 10 Ft.	101664	18.0	8.2	101666	23.8	10.7	101668	36.0	16.3	101670	46.0	20.8	—	—	—

STANDARD

"WM" Design Double Tube Core Barrels

The "WM" Design Barrel is an effective tool for recovering cores from friable and caving strata. The construction of the barrel is similar to the swivel type double tube core barrel except the core lifter is contained in a lifter case attached to the inner barrel.

This allows the skirt of the lifter case to extend to the bottom of the diamond bit and protects the core from water washing except at the face of the bit. The "M" Barrel is very useful for extremely sensitive coring requirements and where other type of barrels are not effective.

"WM" Core Barrel — Nominal Dimensions

Size	Hole Diameter		Core Diameter		Outer Tube O.D.		Outer Tube I.D.		Inner Tube O.D.		Inner Tube I.D.	
	Inches	mm	Inches	mm	Inches	mm	Inches	mm	Inches	mm	Inches	mm
EWM	1-1/2	38.1	7/8	21.5	1-7/16	36.5	1-3/16	30.2	1-1/16	27.0	15/16	23.8
AWM	1-7/8	47.62	1-1/8	30.0	1-13/16	46.0	1-17/32	38.9	1-13/32	35.7	1-1/4	31.7
BWM	2-3/8	60.3	1-5/8	42.0	2-9/32	57.9	2	50.8	1-7/8	47.6	1-23/32	43.6
NWM	2-1/5/16	71.4	2-1/8	54.7	2-29/32	73.8	2-5/8	66.7	2-1/2	63.5	2-1/4	57.1

"WM" Design — Double Tube Core Barrels

Hard Face Heads						For Abrasive Formations					
Assembly Includes Hardfaced Core Barrel Head. Outer Tube Lifter Case, Inner Tube and Thread Protector.						With Chrome Plated Outer Tube					
	5 Ft. *(1.52m)*			10 Ft. *(3.048m)*			5 Ft. *(1.52m)*			10 Ft. *(3.048m)*	
		Weight			Weight			Weight			Weight	
Size	Part No.	Lbs.	kg	Part No.	Lbs.	kg	Part No.	Lbs.	kg	Part No.	Lbs.	kg
EWM	20319-68	16.0	7.2	20319-70	29.0	13.1	20319-80	16.0	7.2	20319-81	29.0	13.1
AWM	20320-68	25.0	11.3	20320-70	44.0	19.9	20320-80	25.0	11.3	20320-81	44.0	19.9
BWM	20321-68	37.0	16.8	20321-70	61.0	27.6	20321-80	37.0	16.8	20321-81	61.0	27.6
NWM	20322-68	67.0	30.3	20322-70	103.0	46.7	20322-80	67.0	30.3	20322-81	103.0	46.7

"WM" Design Double Tube Core Barrels — Spare Parts

Description	EWM			AWM			BWM			NWM		
		Weight			Weight			Weight			Weight	
	Part No.	Lbs.	kg	Part No.	Lbs.	kg	Part No.	Lbs.	kg	Part No.	Lbs.	kg
Outer Head Assembly "W"	20398-5	1.8	.81	20399-5	5.0	2.2	20400-8	8.8	4.0	20401-6	15.0	6.8
Outer Head "W"	300130	1.0	.45	300224	3.0	1.4	300219	6.0	2.7	300094	9.8	4.4
Inner Head	100098	*	*	100066	1.0	.45	100002	1.0	.45	100034	3.0	1.4
Thrust Bearing	90000-25	*	*	90000-4	*	*	900004	*	*	90000-8	1.0	.45
Bushing	150035-5†	*	*	—	—	—	—	—	—	—	—	—
	150035-6†	*	*	100004	*	*	100004	*	*	100036	1.0	.45
Locknut	100099	*	*	100003	*	*	100003	*	*	100035	*	*
Rollpin	90107-105	*	*	90107-105	*	*	90107-105	*	*	90107-251	*	*
Outer Tube 5 Ft.	100101	8.0	3.6	100068	12.0	5.4	100006	17.0	7.7	1000039	22.0	10.0
Outer Tube 10 Ft.	100102	13.0	5.8	100069	24.0	10.8	100007	34.0	15.4	100040	44.0	20.0
Inner Tube 5 Ft.	300106	3.0	1.4	300073	8.0	3.6	300011	10.8	4.5	300044	17.8	8.0
Inner Tube 10 Ft.	300107	6.0	2.7	300074	15.0	6.8	300012	18.0	8.1	300045	35.0	15.9
Thread Protector	101671	*	*	101672	*	*	101673	*	*	101674	1.0	.45
Lifter Case	100111	*	*	100078	*	*	100016	*	*	100049	*	*
Center Pin	NA	—	—	—	—	—	—	—	—	100037	*	*
Optional												
Core Lifter	100112	*	*	100079	*	*	100017	*	*	100050	*	*
Bit	—	—	—	—	—	—	—	—	—	—	—	—
Roller	100115	*	*	100082	*	*	100020	1.0	.45	100053	1.8	.81
Ext. Coupling	100114-5	2.8	1.3	100081	3.0	1.4	100019	5.0	2.2	100052	10.0	4.5
Blank Reaming Shell	100110	*	*	100077	*	*	100015	1.5	.67	100048	2.0	.90
For Abrasive Formations												
Outer Tube 5 Ft.	100119	8.0	1.26	100086	12.0	5.4	100024	17.0	7.7	100057	22.0	9.9
Outer Tube 10 Ft.	100120	13.0	5.8	100087	24.0	10.9	100025	34.0	15.4	100058	44.0	20.0

** Less Than One Pound or .45 kg. Note: † Steel and Bronze Spacers Required For EWM Only. NA—Not Applicable*

STANDARD

Core Barrels

Large Diameter Design Core Barrels

A whole series of large diameter, swivel type, double tube core barrels have been developed and accepted as standards by the Diamond Core Drill Manufacturers Association. This series includes those sizes that are larger than "HWG" design.

Construction features are much the same as for "M" design barrels but because of the larger sizes involved, these tools are more sturdy.

A good axiom to remember is, "The larger the hole, the better the chance of a good core." Large design barrels are in use wherever extremely difficult coring materials are encountered or where actual large physical volume of core is required for tests and analysis.

Sizes of these barrels are shown below. First numeral indicates core size, the second the size of the hole. Note that the two larger sizes are equipped with sludge barrels to help keep a clean hole.

Large Design Core Barrel — Nominal Dimensions

Size	Hole Diameter		Core Diameter		Outer Tube O.D.		Outer Tube I.D.		Inner Tube O.D.		Inner Tube I.D.	
	Inches	mm	Inches	mm	Inches	mm	Inches	mm	Inches	mm	Inches	mm
2-3/4" x 3-7/8"	3-7/8	98.4	2-11/16	68.3	3-5/8	92.0	3-1/4	82.5	3	76.2	2-25/32	70.6
4" x 5-1/2"	5-1/2	139.6	3-15/16	100.8	5-1/4	133.3	4-3/4	120.0	4-1/2	113.7	4-1/8	104.7
6" x 7-3/4"	7-3/4	196.8	5-15/16	151.6	7-1/4	184.4	6-3/4	171.4	6-1/2	165.1	6-1/8	155.5

Large Design — Core Barrel Assembly

Includes Core Barrel Head, Outer Tube, Inner Tube, Plain Reamer Shell and Thread Protector.

Size	5 Ft. *(1.52M)*			10 Ft. *(3.048M)*			Core Barrel Head Box Connection
	Part No.	Weight Lbs.	Weight kg	Part No.	Weight Lbs.	Weight kg	
2-3/4" x 3-7/8"	20644-1	78.0	35.3	20644-2	130.0	58.9	NW Rod
4" x 5-1/2"	20646-1	230-0	104-0	20646-2	335.0	152.0	2-7/8" API Reg.
6" x 7-3/4"	20648-1	335.0	152.0	20648-2	490-0	222.0	3-1/2" API Reg.

Note: On 4" x 5-1/2" and 6" x 7-3/4" Sizes, the Assembly Includes Sludge Barrel.

Large Design Core Barrel — Bottom Assemblys

Item No.	Description	2-3/4" x 3-7/8"			4" x 5-1/2"			6" x 7-3/4"		
		Part. No.	Weight Lbs.	Weight kg	Part No.	Weight Lbs.	Weight kg	Part No.	Weight Lbs.	Weight kg
Bottom Assembly No. 1										
1	Inner Tube Extension	100830	1.0	.45	100836	4.0	1.8	100846	7.0	3.1
2	Core Lifter	100831	*	*	100837	*	*	100843	1.0	.45
3	Blank Bit	100832	1.0	.45	100838	4.0	1.8	100844	6.0	2.7
Optional Bottom Assembly No. 2										
1	Inner Tube Extension	100830	1.0	.45	100836	4.0	1.8	100846	7.0	3.1
2	Core Lifter	100831	*	*	100837	*	*	100843	1.0	.45
3	Blank Bit *(Bottom Discharge)*	100833	1.0	.45	100839	3.0	1.4	100845	7.0	3.1
Optional Bottom Assembly No. 3										
1	Inner Tube Extension	100834	1.0	.45	100840	4.0	1.8	100842	7.0	3.1
2	Basket Lifter *(Not Illustrated)*	300835	*	*	300841	*	*	300847	1.0	.45
3	Blank Bit	100832	2.0	.90	100838	4.0	1.8	100844	6.0	2.7
Optional Bottom Assembly No. 4										
1	Inner Tube Extension	100834	1.0	.45	100840	4.0	1.8	100842	7.0	3.1
2	Basket Lifter *(Not Illustrated)*	300835	*	*	300841	*	*	300847	1.0	.45
3	Blank Bit *(Bottom Discharge)*	100833	2.0	.90	100839	4.0	1.8	100845	7.0	3.1

** Less than one pound or .45 kg.*

Large Diameter Design Spare Parts

Large Diameter Design Core Barrel — Spare Parts										
Item No.	Description	2-3/4" x 3-7/8"			4" x 5-1/2"			6" x 7-3/4"		
		Part No.	Weight		Part No.	Weight		Part No.	Weight	
			Lbs.	kg		Lbs.	kg		Lbs.	kg
1	Sludge Barrel	—	—	—	100915	41.0	17.8	100919	50.0	21.8
2	Sub-NW Rod Box to 2-7/8" API Reg. Pin	—	—	—	110047-21	14.0	6.1	—	—	—
2	Sub-NW Rod Box to 3-1/2" API Reg. Pin	—	—	—	—	—	—	110047-22	20.0	8.7
3	Outer Tube Cap, NW Box	300803-2	13.0	5.6	—	—	—	—	—	—
3	Outer Tube Cap	—	—	—	300812-1	34.0	18.8	300821-1	80.0	34.8
4	Bearing Housing Cap	100805	1.0	.45	100814	1.0	.45	100823	3.0	1.3
5	Inner Tube Cap	100806	3.0	1.3	100815	9.0	3.9	100824	16.0	7.0
6	Key	90205	*	*	90801-41	*	*	3/16x5/16x1-1/4 lg.		*
7	Outer Tube — 10 Ft.	10807-2	70.0	30.4	10816-2	136.0	60.0	300825-2	192.0	83.5
8	Inner Tube — 5 Ft.	300808-1	19.0	8.3	300817-1	48.0	20.8	300826-1	61.0	26.5
8	Inner Tube — 10 Ft.	300808-2	39.0	17.0	300817-2	95.0	41.3	300826-2	120.0	52.2
9	Wash Tube	100809	1.8	.78	100818	3.0	1.3	100827	5.0	2.2
10	Drop Ball	90212-23	*	*	90212-23	*	*	90212-24	*	*
11	Pipe Plug	90831-1	*	*	90831-1	*	*	90831-1	*	*
12	Seal *(Upper)*	90363-45	*	*	90363-89	*	*	90363-154	*	*
13	Seal *(Lower)*	90363-107	*	*	90363-174	*	*	90363-217	*	*
14	Ball Bearing	90078-205	*	*	90094-307	3.0	1.3	90094-310	4.0	1.7
15	Lock Nut	100810	*	*	100819	*	*	10828	*	*
16	Lock Washer	90399-05	*	*	90399-07	*	*	90399-09	*	*
17	Hex Nut *(Not Shown)*	90264-16	*	*	—	—	—	—	—	—
18	Cap Screw	90239-212	*	*	90239-255	*	*	90239-284	*	*
19	Lock Washer	90343-5	*	*	90343-6	*	*	90343-7	*	*
20	Reaming Shell Blank	100811	4.0	1.7	100820	9.0	4.0	100829	19.0	8.3
21	Set Screw *(Not Shown)*	—	—	—	—	—	—	90402-29	*	*
—	Head Assembly *(Less Sludge Barrel - Box Connection)*	20645-1 NW Rod	23.0	10.0	20647-1 2-7/8" API	60.0	26.1	20649-1 3-1/2" API	125.0	54.4
—	Thread Protector	10046	1.5	.65	100604	2.0	.87	100603	2.5	1.1

** Less than one pound or .45 kg.*

STANDARD

Core Barrels

Core Barrel Specifications

"WG" Design — Single Tube Core Barrels
Nominal Dimensions

Size		Single Tube		Set Reaming Shell	Set Bit	
		O.D.	I.D.	O.D.	O.D.	I.D.
EWG	Inch	1.437	0.937	1.485	1.470	0.845
	mm	36.5	23.8	37.7	37.3	21.4
AWG	Inch	1.812	1.281	1.890	1.875	1.185
	mm	46.0	32.5	48.0	47.6	30.0
BWG	Inch	2.281	1.750	2.360	2.345	1.655
	mm	57.9	44.4	59.9	59.5	42.0
NWG	Inch	2.906	2.250	2.980	2.965	2.155
	mm	73.8	57.1	75.6	75.3	54.7
HWG	Inch	3.750	3.125	3.907	3.890	3.000
	mm	95.2	79.3	99.2	98.8	76.2

The "G" Design core barrels replace the "X" design core barrels.
The "X" Design core barrels are now obsolete.

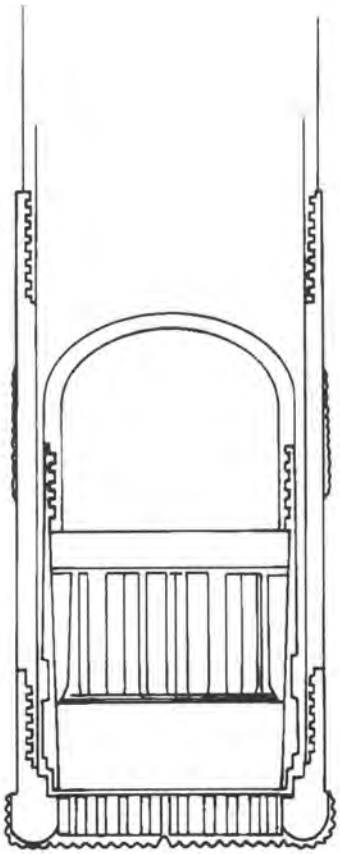

"WG" Design — Double Tube Core Barrels
Nominal Dimensions

Size		Double Tube		Set Reaming Shell	Set Bit	
		Outer Tube	Inner Tube			
		O.D.	I.D.	O.D.	O.D.	I.D.
EWG	Inch	1.437	0.937	1.485	1.470	0.845
	mm	36.5	23.8	37.7	37.3	21.4
AWG	Inch	1.812	1.250	1.890	1.875	1.185
	mm	46.0	31.7	48.0	47.6	30.0
BWG	Inch	2.281	1.718	2.360	2.345	1.655
	mm	57.9	43.6	59.9	59.5	42.0
NWG	Inch	2.906	2.250	2.980	2.965	2.155
	mm	73.8	57.1	75.6	75.3	54.7
HWG	Inch	3.750	3.062	3.907	3.890	3.000
	mm	95.2	77.7	99.2	98.8	76.2

"WM" Design — Core Barrels
Nominal Dimensions

Size		Outer Tube	Inner Tube	Set Reaming Shell	Set Bit	
		O.D.	I.D.	O.D.	O.D.	I.D.
EWM	Inch	1.437	0.937	1.485	1.470	0.845
	mm	36.5	23.8	37.7	37.3	21.4
AWM	Inch	1.812	1.250	1.890	1.875	1.185
	mm	46.0	31.7	48.0	47.6	30.0
BWM	Inch	2.281	1.718	2.360	2.345	1.655
	mm	57.9	43.6	59.9	59.5	42.0
NWM	Inch	2.906	2.250	2.980	2.965	2.155
	mm	73.8	57.1	75.6	75.3	54.7

Large Diameter Design — Core Barrels
Nominal Dimensions

Size		Outer Tube	Inner Tube	Set Reaming Shell
I.D. x O.D.		O.D.	I.D.	O.D.
2-3/4 x 3-7/8	Inch	3.625	2.781	3.875
	mm	92.0	70.6	98.4
4 x 5-1/2	Inch	5.250	4.125	5.495
	mm	133.3	104.7	139.5
6 x 7-3/4	Inch	7.250	6.125	7.750
	mm	184.1	155.5	196.8

Size		Set Bit		Casing Size
I.D. x O.D.		O.D.	I.D.	
2-3/4 x 3-7/8	Inch	3.840	2.690	HX or HW
	mm	97.5	68.3	
4 x 5-1/2	Inch	5.435	3.970	SW
	mm	138.0	100.8	
6 x 7-3/4	Inch	7.655	5,970	ZW
	mm	194.4	151.6	

Standard core barrel lengths are 5 ft. (1.52m) and 10 ft. (3.05m).

Heavy Duty Split Tube "Lynac" Samplers

U.S. Patent No. 2795395

This widely used sampler is a heavy duty version of the standard split tube sampler. The Acker Drill Company developed and patented this split tube sampler which is better adapted to severe service under hard driving than the standard type...Coarse threads in the sampler head speeds assembly and disassembly...As with all other Acker tube style samplers, the shoe is Heat Treated to stand exceptional abuse. The standard length of the samples is 18" with 24" an option. Ball check feature prevents washing out sample on withdrawal from the hole. The shoe is recessed to accommodate a trap valve and spring or basket retainer...A liner is optional to accommodate successive sampling. Note the step in tube design—prevents bowing when driven—and the heavy duty threads in head section. This sampler is recommended for Standard Penetration Tests as well as other tests with heavier hammers. For additional service capability, Acker makes available "Heat Treated" split sections for the 2" O.D. Size "Lynac."

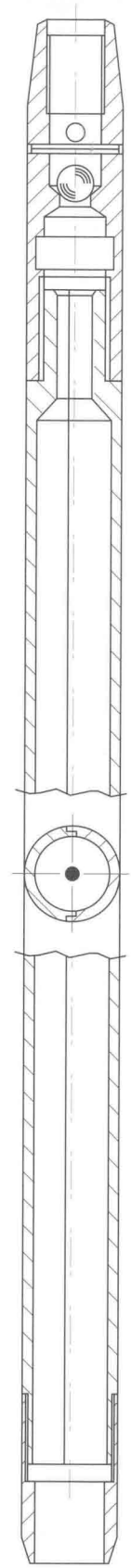

Heavy Duty Acker Lynac Split Tube Sampler
With Heat Treated Shoes

Size	Shoe I.D.	Conn.	Sample Length Inches	Sample Length mm	Part No.	Weight Lbs.	Weight Kg
2" O.D.x1-1/2" I.D. *(50.8 x 38.1 mm)*	1-3/8" *(34.9 mm)*	AW	18	457.2	22124-3	12.5	5.6
			24	609.0	22124-4	13.5	6.1
2-1/2" O.D. x 2" I.D. *(63.5 x 50.8 mm)*	1-7/8" *(47.6 mm)*	AW	18	457.2	22044-3	20.5	9.2
			24	609.0	22044-4	23.0	10.4
3" O.D. x 2-1/2" I.D. *(76.2 x 63.5 mm)*	2-3/8" *(60.3 mm)*	NW	18	457.2	22045-7	26.0	11.7
			24	609.0	22045-8	30.5	13.8
3-1/2" O.D. x 3" I.D. *(88.9 x 76.2 mm)*	2-7/8" *(73.0 mm)*	NW	18	457.2	22046-7	38.5	17.4
			24	609.0	22046-8	43.0	19.4
4-1/2" O.D. x 4" I.D. *(113.7 x 101 mm)*	3-7/8" *(98.4 mm)*	NW	18	457.2	22047-7	54.0	24.5
			24	609.0	22047-8	60.0	27.1
2" O.D. x 1-1/2" I.D. *(50.8 x 38.1 mm)*	1-3/8" *(34.9 mm)*	AWJ	18	457.2	22043-31	12.5	5.6
			24	609.0	22043-32	13.5	6.1

Lynac Split Tube Sampler...For Severe Service
With Heat-Treated Split Sections and Shoe Assembly

Size	Shoe I.D.	Conn.	Sample Length Inches	Sample Length mm	Part No.	Weight Lbs.	Weight kg
2" O.D. x 1-1/2" I.D. *(50.8 x 38.1 mm)*	1-3/8" *(34.9 mm)*	AW	18	457.2	22124-3	12.5	5.6
			24	609.0	22124-4	13.5	6.1

Options & Spare Parts — Lynac Split Tube Sampler

Diameter/Size:	2" O.D.		2-1/2"O.D.		3" O.D.		3-1/2"O.D.		4-1/2" O.D.	
Name of Part	Part No.	Wt. Lbs.	Part No.	Wt. Lbs.	Part No.	Wt. Lbs.	Part No.	Wt. Lbs.	Part No.	Wt. Lbs.
Head Assembly "W"	22005-4	4.0	22005-14	6.0	22005-19	11.0	22005-24	16.0	22005-29	24.0
Head Assembly "AWJ"	22005-36	4.0	NA	—	NA	—	NA	—	NA	—
Tube - 18"	22016-50	10.0	22016-17	12.0	22016-19	15.0	22016-27	20.0	22016-29	26.0
Tube - 24"	22016-52	11.0	22016-18	15.0	22016-20	19.0	22016-28	24.0	22016-30	30.0
Open Shoe - Blunt	120062-4	1.0	120062-2	1.0	120062-7	2.0	120062-1	2.0	120062-8	2.0
Open Shoe - ASTM	120062-5	1.0	NA	—	NA	—	NA	—	NA	—
H.T. Tube 18"	22016-51	10.0	NA	—	NA	—	NA	—	NA	—
H.T. Tube 24"	22016-53	11.0	NA	—	NA	—	NA	—	NA	—
Spacer	150035-272	†	150035-273	†	150035-274	†	150035-275	†	150035-276	†
Brass Liner - 18"	120060-7	2.0	120060-2	2.0	120060-10	2.0	NA	—	NA	—
Brass Liner - 24"	120060-16	2.0	120060-18	2.0	120060-19	2.0	NA	—	NA	—
Teflon Liner - 18"	120966-1	*	NA	—	NA	—	NA	—	NA	—
Teflon Liner - 24"	120966-2	*	NA	—	NA	—	NA	—	NA	—
Clear Plastic Liner - 18"	120878-1	*	120878-7	*	120878-9	*	120878-10	*	NA	—
Clear Plastic Liner - 24"	120878-2	*	120878-8	*	120878-3	*	120878-11	*	NA	—
Plastic Cap	90367-35	*	90367-43	*	90367-49	*	90367-55	*	NA	—

** Less than one pound or 45 kilograms. † Limited sizes.*
NA = Not Available.

Soil Sampling

Standard Split Tube Samplers

For Standard Penetration Test*

This split tube sampler is designed for taking soil samples at the bottom of the cleaned bore hole by the drive weight method. The split section is held together with a ball check head and a hardened steel drive shoe. The ball check feature in the head prevents samples from being washed out of sampler upon withdrawal from the hole. The sampler is designed to accommodate a brass, plastic or paper tube liner for collecting and carrying samples to the field office. Two sample lengths are available. Note steps in tube design...Acker's Heat Treated Drive Shoe is recessed to accommodate various accessories.

All assemblies are designed to accommodate liners which facilitate transportation of samples to laboratory without disturbing soil samples.

**Stainless Steel sampler assemblies and tubes Now Available to meet your environmental sampling requirements.*

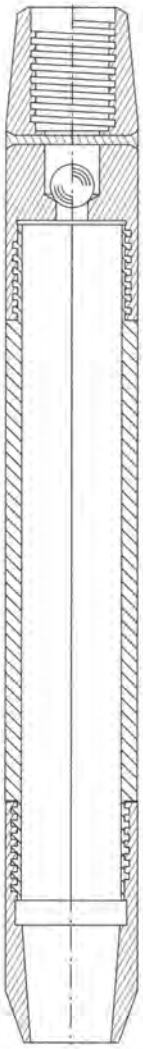

Standard Split Tube Sampler
With Heat-Treated Shoes

Size	Shoe I.D. In./mm	Conn.	Sample Length Inches	Sample Length mm	Part No.	Weight Lbs.	Weight kg
2" O.D. x 1-1/2" I.D. *(50.8 x 38.1 mm)*	1-3/8" *(34.9 mm)*	AW	18	457.2	22017-2	10.5	4.8
			24	609.0	22017-9	12.5	5.6
2-1/2" O.D. x 2" I.D. *(63.5 x 50.8 mm)*	1-7/8" *(47.6 mm)*	AW	18	457.2	22018-2	15.0	6.7
			24	609.0	22018-4	17.5	7.9
3" O.D. x 2-1/2" I.D. *(76.2 x 63.5 mm)*	2-3/8" *(60.3 mm)*	NW	18	457.2	22019-3	19.5	8.8
			24	609.0	22019-4	23.0	10.4
3-1/2" O.D. x 3" I.D. *(88.9 x 76.2 mm)*	2-7/8" *(73.0 mm)*	NW	18	457.2	22022-2	22.0	9.9
			24	609.0	22022-6	25.0	11.3
4-1/2" O.D. x 4" I.D. *(113.7 x 101 mm)*	3-7/8" *(98.4 mm)*	NW	18	457.2	22020-3	33.5	15.1
			24	609.0	22020-4	41.5	18.7

Stainless Steel Split Tube Sampler

Size	Shoe I.D. In./mm	Conn.	Sample Length Inches	Sample Length mm	Part No.	Weight Lbs.	Weight kg
2" O.D. x 1-1/2" I.D. *(50.8 x 38.1 mm)*	1-3/8" *(34.9 mm)*	AW	24	609.0	22017-19	10.2	4.6
3" O.D. x 2-1/2" I.D. *(76.2 x 63.5 mm)*	2-3/8" *(60.3 mm)*	AW	24	609.0	22019-13	18.9	8.6

Stainless Steel Sampler — Options and Spare Parts

Description	2" O.D.	3" O.D.
Head Assembly	22036-58	22036-57
Tube - 24"	22016-57	22016-58
Open Shoe	120062-28	120062-29
Basket Retainer	320928	320929
Special Coupling	120161-9	120161-11

Options & Spare Parts — Standard Split Tube Sampler

Diameter/Size:	2" O.D.		2-1/2" O.D.		3" O.D.		3-1/2" O.D.		4-1/2" O.D.	
Name of Part	AW Part No.	Wt. Lbs.	AW Part No.	Wt. Lbs.	NW Part No.	Wt. Lbs.	NW Part No.	Wt. Lbs.	NW Part No.	Wt. Lbs.
Head Assembly "W"	22036-7	3.0	22036-4	6.0	22036-10	8.0	22036-2	9.0	22036-12	11.0
Tube — 18"	22016-6	10.0	22016-2	12.0	22016-8	11.0	22016-1	14.0	22016-10	15.0
Tube — 24"	22016-7	11.0	22016-12	15.0	22016-9	12.0	22016-24	15.0	22016-11	16.0
Open Shoe — Blunt 1/16"	120062-4	1.0	120062-2	1.0	120062-7	2.0	120062-1	2.0	120062-8	3.0
Open Shoe — ASTM 1/16"	120062-5	1.0	—	—	—	—	—	—	—	—
Spacer	150035-272	†	150035-273	†	150035-274	†	150035-275	†	1500276	†
Brass Liner — 18"	120060-7	2.0	120060-2	2.0	120060-10	3.0	NA	-	NA	-
Brass Liner — 24"	120060-16	2.0	120060-18	2.5	120060-19	3.0	NA	-	NA	-
Teflon Liner — 18"	120966-1	*	NA	-	NA	-	NA	-	NA	-
Teflon Liner — 24"	120966-2	*	NA	-	NA	-	NA	-	NA	-
Clear Plastic Liner — 18"	120878-1	*	120878-7	*	120878-9	*	120878-10	*	NA	-
Clear Plastic Liner — 24"	120878-2	*	120878-8	*	120878-3	*	120878-11	*	NA	-
Plastic Cap	90367-35	*	90367-43	*	90367-49	*	90367-55	*	NA	*
Special Coupling	120161-1	1.0	120161-2	1.0	120161-3	1.0	120161-4	1.0	120161-5	1.0

** Less than one pound or .45 kilogram. † Limited Sizes. NA = Not Available.*

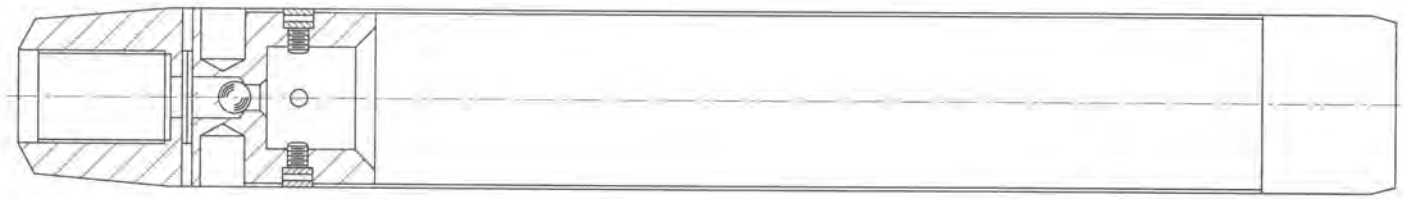

Thin Wall Tube Samplers

This sampler is designed to take undisturbed samples in cohesive type soils and clays...The thin steel tube containing the sample may be removed from the sampler head and used as a container to transport sample to laboratory thus avoiding any damage to sample or costly delays in operation. In practice several replacement tubes are carried by crew to minimize disturbance, preserve moisture and cut down on delays in sampling procedure. The thin wall tube is made available in either steel, galvanized or brass and in varying lengths. This sampler is also commonly called a "Shelby" or "Chicago" thin wall sampler. The procedure for taking samples is outlined under ASTM Standard Procedures, whereby the sampler is pressed into the undisturbed clay or silts by hydraulic force.

Stainless Steel tubes Now Available to meet your environmental sampling requirements.

Thin Wall Tube Sampler

See Options Below for Galvanized Tubes

Size	Length of Steel Tube* Inches	Length of Steel Tube* mm	Rod Conn.	Part No.	Weight Lbs.	Weight kg
2" O.D. x 1-7/8" I.D. *(50.8 x 47.7 mm)*	30	762	AW	22007-8	7.0	3.1
	36	914	AW	22007-10	8.0	3.6
	54	1371	AW	22007-12	10.0	4.5
2-1/2" O.D. x 2-3/8" I.D. *(63.5 x 60.3 mm)*	30	762	AW	22027-8	11.0	4.9
	36	914	AW	22027-10	12.0	5.4
	54	1371	AW	22027-12	14.0	6.3
3" O.D. x 2-7/8" I.D. *(76.2 x 72.0 mm)*	30	762	NW	22012-8	16.0	7.2
	36	914	NW	22012-10	16.5	7.4
	54	1371	NW	22012-12	19.0	8.6
3-1/2" O.D. x 3-3/8" I.D. *(88.9 x 84.6 mm)*	30	762	NW	22058-8	20.0	9.0
	36	914	NW	22058-10	21.0	9.5
	54	1371	NW	22058-12	23.0	10.4
4-1/2" O.D. x 4-3/8" I.D. *(113.7 x 110.5 mm)*	30	762	NW	22032-8	24.0	10.8
	36	914	NW	22032-10	27.0	12.2
	54	1371	NW	22032-12	31.0	14.0
5" O.D. x 4-7/8" I.D. *(127.0 x 105.9 mm)*	30	762	NW	22035-8	36.5	16.5
	36	914	NW	22035-10	39.0	17.6
	54	1371	NW	22035-12	43.0	19.4

** Sample length is 2-1/2" (63.5 mm) shorter than tube length.*

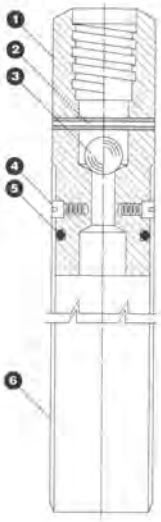

Optional and Spare Parts — Thin Wall Sampler

Item No.	Diameter and Head Thread Conn. / Name of Part	2" O.D. AW Part No.	2" O.D. Wt. Lbs. *(kg)*	2-1/2" O.D. AW Part No.	2-1/2" O.D. Wt. Lbs. *(kg)*	3" O.D. NW Part No.	3" O.D. Wt. Lbs. *(kg)*	3-1/2" O.D. NW Part No.	3-1/2" O.D. Wt. Lbs. *(kg)*	4-1/2" O.D. NW Part No.	4-1/2" O.D. Wt. Lbs. *(kg)*	5" O.D. NW Part No.	5" O.D. Wt. Lbs. *(kg)*
1.	Head Assembly "W"	22033-3	4.0 *(1.8)*	22033-7	7.0 *(3.1)*	22033-5	11.0 *(4.9)*	22033-23	13.0 *(5.8)*	22033-11	17.0 *(7.7)*	22033-16	21.0 *(3.1)*
2.	Ball	90213-18	* *	90213-18	* *	90213-18	* *	90213-18	* *	90213-18	* *	90213-18	* *
3.	Rollpin	90107-251	* *	90107-251	* *	90107-251	* *	90107-251	* *	90107-251	* *	90107-251	* *
4.	Cap Screw *(4 Req'd)*	120660	* *	120652	* *	120652	* *	120652	* *	120652	* *	120652	* *
5.	Galvanized Tube — 30"	120021-19	3.1 *(1.4)*	—	—	120037-19	5.0 *(2.3)*	NA	—	NA	—	NA	—
5.	Galvanized Tube — 36"	120021-20	3.8 *(1.7)*	—	—	120037-21	6.0 *(2.7)*	NA	—	NA	—	NA	—
5.	Galvanized Tube — 54"	120021-21	5.6 *(2.5)*	—	—	—	—	NA	—	NA	—	NA	—
5.	Steel Tube — 30"	120021-4	3.1 *(1.4)*	120086-4	4.0 *(1.8)*	120037-4	4.8 *(2.2)*	120093-11	5.5 *(2.5)*	120095-4	7.3 *(3.3)*	120109-4	16.5 *(7.5)*
5.	Steel Tube — 36"	120021-5	3.8 *(1.7)*	120086-5	4.8 *(2.2)*	120037-5	5.7 *(2.6)*	120093-12	6.6 *(3.0)*	120095-5	8.7 *(3.9)*	120109-5	19.8 *(9.0)*
5.	Steel Tube — 54"	120021-6	5.6 *(2.5)*	120086-6	7.2 *(3.3)*	120037-6	8.6 *(3.9)*	120093-13	9.9 *(4.5)*	120095-6	13.1 *(5.9)*	120109-6	29.6 *(12.1)*
5.	Brass Tube — 30"	120022-4	4.0 *(1.8)*	120085-4	4.0 *(1.8)*	120038-4	6.0 *(2.7)*	120092-10	7.0 *(3.2)*	120094-4	7.0 *(3.2)*	NA	—

*Note: Sample length is 2-1/2" shorter than tube length. * Less than one pound or .45 kilogram.*

Acker Denison Core Barrel

Special Undisturbed Soil Sampling Core Barrel U.S. Patent No. 2,403,002

The Acker Denison Soil Sampling Barrel is designed for taking undisturbed samples of cohesive soils, rate earths, kaolin and similar soft and easily eroded materials.

The soil core is retained by wall friction or by a basket type retainer. Three lengths of sawtooth borium faced cutter shoes are provided with each barrel to facilitate sampling in soft, medium or hard materials.

When extremely hard and compacted formations are encountered, the Denison Core Barrel can be fitted with a bit assembly consisting of an inner tube extension and special split ring core lifter. A diamond or carbide insert type bit is recommended depending on the hardness encountered.

The Acker Denison core Barrel is manufactured in five standard sizes: 2-15/16" O.D., 3-1/2" O.D., 4-1/2" O.D., 5-1/2" O.D., and 7-3/4" O.D. Each size recovers a relatively large sample in the inner non-rotating tube of the barrel. This inner tube is lined with thin plastic liners so that the sample can be recovered, capped and preserved in the same manner as when using thin wall tube samplers or stationary piston samplers. Standard length barrels recover either two or five foot samples. The shorter barrels are recommended foxr sampling softer materials. The Denison Core Barrel can be operated by any standard drill rig capable of using N rods or larger. The sampler is designed for use with either clear water, drilling mud or air.

Acker Denison Undisturbed Soil Sampling Core Barrel
(U.S. Patent No. 2,403,002)

Sampler O.D.	2-15/16" *(74.6 mm)*			3-1/2" *(88.9 mm)*			4" *(101.6 mm)*			5-1/2" *(139.7 mm)*			7-3/4" *(196.9 mm)*		
Hole Diameter *(Nominal)*	3-1/16" *(77.8 mm)*			3-5/8" *(92.0 mm)*			4-1/8" *(104.8 mm)*			5-5/8" *(142.9 mm)*			7-7/8" *(200.0 mm)*		
Core Diameter *(Nominal)*	1-7/8" *(47.6 mm)*			2-3/8" *(59.9 mm)*			2-13/16" *(71.4 mm)*			4-3/32" *(104.0 mm)*			6-5/16" *(160.3 mm)*		
Rod Connection *(Box)*	NW			NW			2-7/8" API Reg.			2-7/8" API Reg.			3-1/2" API Reg.		
Part Description	Part No.	Weight Lbs.	Weight kg	Part No.	Weight Lbs.	Weight kg	Part No.	Weight Lbs.	Weight kg	Part No.	Weight Lbs.	Weight kg	Part No.	Weight Lbs.	Weight kg
Complete Assembly 2 ft. Core Cap. *(.61 m)*	22143-2	63.0	28.6	22098-1	65.0	29.4	22099-1	75.0	33.9	22050-1	200.0	90.6	22100-1	320.0	145.0
Complete Assembly 5 ft. Core Cap. *(1.5 m)*	22143-1	95.0	43.1	22098-2	100.0	45.3	22099-2	140.0	63.4	22050-2	250.0	113.2	22100-2	355.0	160.8

Parts for Denison Core Barrel — 2 Ft. Core Assembly

Item No.	Parts List Description	No. Req.	2-15/16" (74.6 mm) Part No.	3-1/2 (88.9 mm) Part No.	4" (101.6 mm) Part No.	5-1/2" (139.7 mm) Part No.	7-3/4" (196.9 mm) Part No.
—	Complete Head Assembly	1	22144-1	22104-1	22101-1	22051-1	22105-1
1	Outer Head	1	320814	320485	320469	320198	320503
2	Outer Tube	1	120824	120475	120463	120178	120493
3	Bearning Cap	1	120816	120488	120472	120169	120506
4	Shaft	1	120487	120487	120471	120173	120505
5	Inner Head	1	120810	120486	120470	120174	120504
6	Key	1	90109-61	90109-61	90109-61	90109-123	90109-123
7	Inner Tube	1	120825	120477	120465	120180	120495
—	Check Valve Assembly	1	22052-5	22052-1	22052-2	22052-3	22052-4
8	Check Valve Closure	1	120483	120483	120172	120172	120501
9	Check Valve	1	120481	120481	120167	120167	120499
10	Check Valve Washer	1	120482	120482	120170	120170	120500
11	Check valve Base	1	120808	120480	120467	120166	120498
12	Check Valve Spacer	1	120809	120484	120468	120171	120502
13	Liner (Plastic)	1	120878-8	120878-3	120104-56	120104-59	——
14	Shoe, Inner Barrel	1	120508-10	120508-1	120508-2	120508-3	120508-4
15	Basket Retainer	1	320509-5	320509-1	320509-2	320509-3	320509-4
16A	Sawtooth Bit 1/2" Lead	1	320817-1	320479-1	320168-1	320197-1	320497-1
16B	Sawtooth Bit 1-1/2" Lead	1	320817-2	320479-2	320168-2	320197-2	320497-2
16C	Sawtooth Bit 3" Lead	1	320817-3	320479-3	320168-3	320197-3	320497-3
17	O-Ring	1	90108-145	90108-234	90108-237	90108-248	90108-262
18	Oil Seal	2	90363-37	90363-37	90366-73	90366-121	90366-186
19	Bearing	4	90207-205	90207-205	90207-206	90207-209	90207-213
20	Locknut	2	90400-05	90400-05	90400-06	90400-09	90400-13
21	Lockwasher	1	90399-05	90399-05	90399-06	90399-09	90399-13
22	Oil Seal	1	90363-57	90363-57	90363-81	90366-161	90366-225
23	Lockwasher	6	—	90343-4	90343-4	90343-5	90343-6
24	Cap Screw	6	—	90214-169	90214-197	90214-198	90214-199
25	Shaft Nut	1	90284-9	90284-9	90284-16	90294-14	Nut *(2-Req.)* 90400-10
26	Cotter Pin	1	90456-38	90456-38	90456-41	90456-41	Washer 90399-10
27	Roll Pin	1	90107-211	90107-211	90107-315	90107-315	90107-368
28	Grease Fitting	1	90359-26	90359-26	90359-1	90359-1	90359-1
29	Pipe Plug	1	—	—	90831-1	90831-1	90831-1

Denison Conversion Parts — For 5 Ft. Core Length

—	Outer Tube	1	120823	120476	120464	120179	120494
—	Inner Tube	1	120813	120478	120466	120181	120496
—	Liner *(Brass)*	1	120060-61	120182-9	NA	120182-3	120182-12

Optional Bottom Assembly for Coring Soft Rock — With Optional Bits**

30	Inner Tube Extension	1	120821	120489	120473	120176	120507
31	Core Lifter—Special	1	120822	120490	120474	120175	120571
—	Carbide Insert. Btm. Dis. Bit	1	320842	320492	320120	320195	320572
32	Sawtooth Btm. Dischg. Bit**	1	320840	320081	320123	320162	320573
—	Conv. Dischg. Diamond Bit**	1	—	20088	20089	20090	20091

*** Not illustrated.*

Denison — Optional Parts and Accessories

—	Spacer *(In Lieu of Basket Retainer)*	1	120811	150035-145	150035-143	150035-142	150035-146
—	Clear Plastic Liner-2 Ft.	1	120878-8	120878-3	120104-56	120104-59	—
—	Clear Plastic Liner-5 Ft.	1	120104-55	120878-19	120104-57	120104-58	—
—	Plastic Cap for Liner	2	90367-43	90367-49	90367-55	—	—
—	Blank Bit *(Coring)*	1	320820	320491	120118	320192	320574
—	Strap Wrenches	2	90809-3	90809-3	90809-4	90809-4	90809-5

*Less than one pound or .45 kg. **Not illustrated.

Soil Sampling

Stationary Piston Sampler

This sampler features a stationary piston, that is, the piston remains stationary as the outer tube of the sampler is pushed ahead into fine silts or clays. The piston creates suction on the sample assisting it into the sample tube. In operation, the piston closes the entrance of the tube eliminating any change of contamination in the tube prior to pressing. The sampler features a vacuum release and a cone clamp assembly that prevents the piston from pushing out the sample upon recovery. The outer tube, containing the sample, is generally used to carry the sample to the laboratory. Several replacement tubes and caps are desirable to take continuous samples without delay. The actuating rods are in convenient lengths for transportation and are necessary to hold piston during the pressing of the sample. For operation in brackish water, brass or stainless steel tubes are commonly used.

Stainless Steel Tubes now available.

Stationary Piston Sampler — With Steel Tube
*Meets ASTM-AASHO-DCDMA-Standards on Tubes

Size	Sample Tube Length	Rod Conn.	Part No.	Weight Lbs.	Weight kg
2" O.D. x 1-7/8" I.D.* *(50.8 x 47.6 mm)*	30" *762.0 mm*	AW	22056-16	25.0	11.3
2-1/2" O.D. x 2-3/8" I.D. *(63.5 x 60.3 mm)*	30" *762.0 mm*	AW	22053-16	28.0	12.6
3" O.D. x 2-7/8" I.D.* *(76.2 x 73.0 mm)*	30" *762.0 mm*	NW	22041-43	30.0	13.6
3-1/2" O.D. x 3-3/8" I.D. *(88.9 x 85.7 mm)*	30" *762.0 mm*	NW	22057-34	32.0	14.5
4-1/2" O.D. x 4-3/8" I.D. *(113.7 x 110.5 mm)*	30" *762.0 mm*	NW	22065-34	36.0	16.3

Options & Spare Parts — Stationary Piston Sampler
(Optional Tubes See Item No. 11)

Item No.	Diameter and Head Thread Connection / Part Description	2" O.D. AW Part No.	Weight Lbs.	Weight kg	2-1/2" O.D. AW Part No.	Weight Lbs.	Weight kg	3" O.D. NW Part No.	Weight Lbs.	Weight kg	3-1/2" O.D. NW Part No.	Weight Lbs.	Weight kg	4-1/2" O.D. NW Part No.	Weight Lbs.	Weight kg
1	Head	120140-9	2.0	.90	120140-7	6.0	2.7	120140-10	6.0	2.7	120140-12	8.0	3.6	120140-16	11.0	4.9
2	Clamp Spring	120136	*	*	120136	*	*	120136	*	*	120136	*	*	120136	*	*
3	Cone Clamp Assembly	22042-1	*	*	22042-1	*	*	22042-1	*	*	22042-1	*	*	22042-1	*	*
4	Plug	120221	3.0	1.3	120189	5.0	2.2	120142	7.0	3.1	120226	10.0	4.5	120243	12.0	5.4
5	Socket Head Cap Screw *(4 Req'd)*	120660	*	*	120652	*	*	120652	*	*	120652	*	*	120652	*	*
6	Packing Cup *(2 Req'd)*	150045-15	*	*	50045-14	*	*	50045-11	*	*	50045-12	*	*	50045-18	*	*
7	Piston Spacer *(2 Req'd)*	120222	*	*	120190	*	*	120138	1.0	.45	120145	1.0	.45	120297	1.0	.45
8	Piston	120223	*	*	120295	1.0	.45	120143	1.0	.45	120225	1.0	.45	120242	2.0	.90
9	Lockwasher	90399-04	*	*	90399-065	*	*	90399-08	*	*	90399-10	*	*	90399-15	*	*
10	Locknut	90400-04	*	*	90400-065	*	*	90400-08	*	*	90400-10	*	*	90400-15	*	*
11	Steel Tube — 30"	12021-4	3.0	1.3	120086-4	4.0	1.8	120037-4	5.0	2.2	120093-11	7.0	3.1	120095-4	7.0	3.1
11	Brass Tube — 30"	120022-4	4.0	1.8	120085-4	4.0	1.8	120038-4	6.0	2.7	120092-10	6.0	2.7	—	7.0	3.1
11	Stainless Steel Tube - 30"	120045-4	3.5	1.5	1200246-4	4.0	1.8	120030-1	5.0	2.2	120027-7	6.5	2.9	120244-4	7.0	3.1
12	Piston Rod — Master	120139-1	1.5	.67	120139-1	1.5	.67	120139-1	1.5	.67	120139-1	1.5	.67	120139-1	1.5	.67
†	Actuating Rod — 2 Ft.	120219-2	1.5	.67	120219-2	1.5	.67	120219-2	1.5	.67	120219-2	1.5	.67	120219-2	1.5	.67
†	Actuating Rod — 5 Ft.	120219-4	5.0	2.2	120219-4	5.0	2.2	120219-4	5.0	2.2	120219-4	5.0	2.2	120219-4	5.0	2.2
†	Actuating Rod — 10 Ft.	120219-5	7.0	3.1	120219-5	7.0	3.1	120219-5	7.0	3.1	120219-5	7.0	3.1	120219-5	7.0	3.1

** Less than one pound or .45 kg. † Not shown.*

GUS Undisturbed Sampler

This unique, air or hydraulic piston sampler was designed and test proven in the drilling field for many years. The design allows the sampler to be classed as a truly undisturbed piston sampler producing high production sampling.

How it Works:
The GUS Sampler is assembled on a drill rod and lowered to the bottom of a cleaned bore hole. The drill rod may be chucked by means of a chucking rod. A water swivel is attached with a hose line coupled to the swivel and the pressure pump. As the water or air pressure is applied to the drill rods at approximately 100 to 600 PSI, the piston in the head of the assembly forces the thin wall sample tube into the soft underlying soil or clay materials to take the sample.

In Operation:
1) The hole is drilled by rotary means and prepared by using either casing or drilling mud to support the overburden.
2) The drill rods extending the sampler to the bottom of the hole may be clamped to the casing to prevent upward movement from down thrust of fluid or air pressure used...or rods may be connected to the chucking rod in rotary drill head.
3) A water swivel or adaptor is used to direct fluid or air into the drill string to operate the sampler.
4) A positive displacement pump or compressed air is used to exert pressure on the stationary piston of the sampler. Pressure range normally required is 100 to 600 PSI for a least one minute.

Stainless Steel tubes Now Available to meet your environmental sampling requirements.

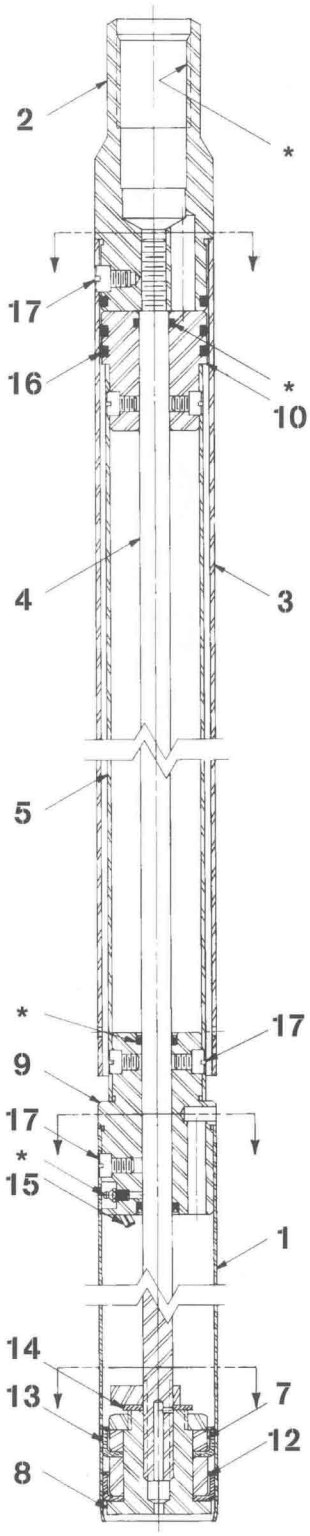

Gus Undisturbed Sampler — Parts

Item No.	Part Description	No. Req'd.	2-1/2 Inch Part No.	3 Inch Part No.	3-1/2 Inch Part No.
—	Rod Connection in Head	—	AW	NW	NW
1	Tube, Sampler *(Steel)*	1	120086-4	120037-4	120093-11
3	Adapter	1	120798-1	120798-5	120798-3
4	Rod, Piston	1	120800-1	120800-6	120800-2
5	Tube, Inner	1	120801-1	120801-2	120801-3
6	Latch, Release	1	120802-1	120802-2	120802-3
7	Retainer	1	120803-1	120803-2	120803-3
8	Piston	1	120804-1	120804-2	120804-3
9	Adapter *(Inner Tube to Sample Tube)*	1	120805-1	120805-2	120805-3
10	Carrier, Tube	1	120806-1	120806-2	120806-3
11	Nut	1	120807-1	120807-2	120807-2
12	Spacer	1	150035-336	150035-312	150035-377
13	Cup, Packing	2	150045-14	150045-11	150045-12
14	Washer, Leather	1	150045-87	150045-71	150045-71
15	Rollpin *(1/4 Dia. x 1-1/2 Long)*	1	90107-186	90107-214	90107-214
16	"O" Ring (2) Piston (1) Adapter	3	90108-328	90108-332	90108-336
17	Capscrews	11	120652-0	120652-0	120652-0
—	O-Ring	1	90108-113	90108-210	90108-210
—	Oil Seal	2	90363-22	90363-37	90363-37
—	Grease Fitting	1	90359-16	90359-16	90359-16
—	Caution Tag	1	150157-209	150157-209	150157-209
	Cylinder	1	120799-1	120799-2	120799-3

Gus Assembly — Sample Tubes and Caps

Size	Assembly* Part No.	Head Conn.	Extra Steel ASTM Tubes	Caps for Sample Tubes
2-1/2"	22142-1	AW	120086-4	90367-49
3"	22142-2	NW	120037-4	90367-55
3-1/2"	22142-3	NW	120093-11	90367-56

** Assembly includes one sample tube and cap screw wrench.*

Specifications — GUS Undisturbed Piston Sampler

Air or Hydraulic (Water)

Sampler Size		Thread in Head Conn.	Sampler Stroke		Sampler Tube Length		Sampler Diameter	Operating Pressure Nominal**		Weight of Assembly	
Inch	mm		Inch	mm	Inch	mm	Decimal	PSI	kg/c²	Lbs.	kg
2-1/2	63.5	AW ROD	24	609	30	762	2.347	100 to 600	7.03 to 42.1	42	19
3	76.2	NW ROD	24	609	30	762	2.841			47	21
3-1/2	88.9	NW ROD	24	609	30	762	3.336			51	23

Operation
The thrust developed by the operation of the GUS Sampler may exceed weight of drill rig...Therefore, caution should be exercised when securing drill rods to casing, drilling equipment or actuating the Sampler above ground. Maximum operating pressure—600 PSI.

Soil Sampling

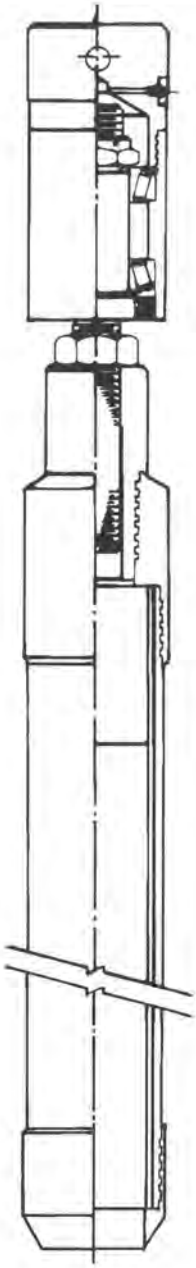

"New" The Laskey Continuous Soil Sampler

The Laskey Sampler was designed to recover continuous, relatively undisturbed soil samples when drilling with Hollow Stem augers and works similarly to the Acker Denison Soil Sampler.

The Laskey provides a continuous 5 ft. soil sample plus accommodates collection of 6 inches of overflow material. The non-rotating sample barrel is available in three sizes and uses liners or a patented resilient sleeve retainer to hold the sample and protect it during recovery operations.

Fast Simple Operation
Continuous 5 Ft. Sample Recovery

The Laskey Sampler is available in three sizes for use inside standard 3-1/4, 3-3/4 and 4-1/4 inch Hollow Stem Augers. The sampler requires minimal maintenance.

Laskey – Auger Drive Adapter

Laskey Size	Auger Size	Hex Size	Part Number
3"	3-1/4 H.S.A.	1-5/8"	320931-0
	3-1/4 H.S.A. *(Diedrich)*	1-5/8"	321049-0
	3-1/4 H.S.A. *(CME)*	1-5/8"	321052-0
	3-1/4 H.S.A. *(Mobile)*	1-5/8"	321052-1
3-1/2"	3-3/4 H.S.A.	1-5/8"	320935-0
4"	4-1/4 H.S.A.	1-5/8"	320957-0
	4-1/4 H.S.A. *(CME)*	1-5/8"	321011-0
	4-1/4 H.S.A. *(Diedrich)*	1-5/8"	321060-0
	6-1/4 H.S.A.	2"	320963-0
	4-1/4 H.S.A.	2"	321063-0
	4-1/4 H.S.A. *(Mobile)*	2"	321067-0

Laskey Continuous Soil Sampler
U.S Patent No. 4,156,469

Laskey Size	Conn.	Assembly Part No.	Outer Tube Barrel Part No.	Head Assembly Part No.	Shoe Part No.	Holder Res. Slv. Part No.	Sampler Head Part No.	6" Liner Part No.	5' Liner Part No.
3" *3-1/4" H.S.*	AW	22152-1	120902 Solid	22155-1	120903	120904	120905	120906-1	120906-2
		22152-2	120902-1 Split						
	AWJ	22152-3	120902 Solid	22155-2			121008		
		22152-4	120902-1 Split						
3-1/2" *3-3/4" H.S.*	NW	22153-1	120910 Solid	22156-1	120911	120912	120913	120914	120914-2
		22153-2	120910-1 Split						
	NWJ	22153-3	120910 Solid	22156-2			121012		
		22153-4	120910-1 Split						
4" *4-1/4" H.S.*	NW	22154-1	120918 Solid	22156-1	120919	120920	120921	120922-1	120922-2
		22154-2	120918-1 Split						
	NWJ	22154-3	120918 Solid	22156-2			121013		
		22154-4	120918-1 Split						

H.S.= Equivalent Hollow Stem Auger Size.

Laskey – Optional Accessories

Laskey Size	Description	Part No.
3"	Basket Retainer	321007
3-1/2"		—
4"		320101-2

Heat-Treated Open Shoes

For Solid or Split Tube Samplers — 8 TPI

Nose Radius 1/16" Blunt				D.C.D.M.A. — A.S.T.M. 1/16" Sharp			
Use W/ Sampler O.D.	Part No.	Weight		Use W/ Sampler O.D.	Part No.	Weight	
		Lbs.	kg			Lbs.	kg
2"	120062-4	1.0	.45	2"	120062-5	1.0	.45
2-1/2"	120062-2	1.0	.45	2-1/2"	—	1.0	.45
3"	120062-7	1.5	.72	3"	—	1.5	.72
3-1/2"	120062-1	1.5	.72	3-1/2"	—	1.5	.72
4-1/2"	120062-8	2.0	.90	4-1/2"	—	2.0	.90

Note: Shoes with 4 TPI are available in most sizes.

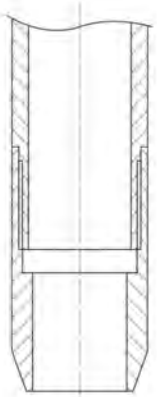

Interchangeable Parts and Accessories

We have grouped together the various types of interchangeable parts and accessories for solid and split-tube type samplers. Since these samplers are repeatedly driven into the earth, it is necessary to periodically replace them. Spare parts should be considered when placing order for samplers.

Open Shoes–

Heat Treated

This open shoe is made from heat treated case hardened steel for sampling coarse materials up to the diameter of the throat opening. The inside diameter of the shoe may be the same as, or slightly smaller, than the inside of the tube, thus making it possible to collect a good representative sample.

Stainless Steel

Now available in stainless steel. For solid or split tube samplers.

Stainless Steel – Open Shoes

For Solid or Split Tube Samplers – 8 TPI

Nose Radius 1/16" Blunt			
For Sampler O.D.	Part No.	Weight	
		Lbs.	kg
2" *(50.8mm)*	120062-28	1.0	0.45
3" *(76.2mm)*	120062-29	1.5	0.72

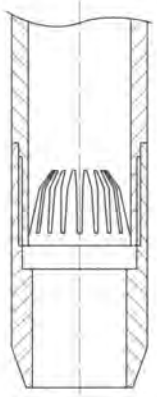

Spring Type Sample Retainer

This inexpensive spring retainer is quite useful in collecting coarse sand and small gravel or unconsolidated type materials. The spring fingers gently press against the sample and hold it in until it is unloaded at the surface. The retainer fits in a slot already provided for it in the sampler show. Fingers are adjustable to improve sampling.

Spring Type Sample Retainers

For 2" O.D. Samplers

Sampler O.D.	Assembly No.	Wt.	Extra Springs	Extra Adapter
			Part No.	Part No.
2"	22037-2	*	120098	120058-14

**Less than one pound or .45 kilograms.*

Basket Retainers– Steel & Plastic

All New—Plastic Retainer

Basket retainers have flexible fingers that open to admit loose dry sand, then close, forming a tight lock, that retains the sample when the tube is removed to the surface. A slot is provided in the sampler show to accommodate the basket ring. Steel basket retainers have heat treated fingers that can be adjusted to improve sampling.

Stainless Steel Retainers now available to meet your environmental sampling requirements.

Basket Retainers

For Use in Split and Solid Tube Samplers

Steel Spring Type				Plastic Type**	
Sampler Size	Part No.	Weight		Soft Fingers	Hard Fingers
		Lbs.	kg	Part No.	Part No.
2"	320110	*	*	120110-1	120110-2
2-1/2"	320100	*	*	Color Coded Yellow	Color Coded Orange
3"	320057	*	*		
3-1/2"	320103	*	*		
4-1/2"	320101	*	*		
5-1/2"	320102	1.0	.45		

**Less than one pound or .45 kilograms. **2" Only.*

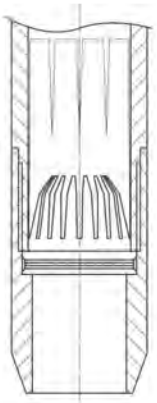

L.A.D. Basket Retainer and Polyethylene Sleeve

U.S. Pat. No. 3,008,529

The L.A.D. steel basket retainer mounts inside Acker sampler shoes for taking samples of free flowing sands, silts and other difficult materials. Upon withdrawal of sampler, the plastic sleeve collapses over the basket and seals the sample within the sample tube. Ideal for use in solid or split tube samplers and for collecting samples of sewage, harbor bottom type sediments and muds. Extra sleeves are inexpensive.

L.A.D Steel Basket Retainer

With Polyethylene Sleeve

Sampler O.D.	Assembly No.	Wt.	Spring Part No.	Top Adapter Part No.	Bottom Adapter Part No.	Sleeve Bag** Part No.	Wt.
2"	22037-1	*	120098	120058-12	120058-13	41026-1	*
2-1/2"	22037-3	*	120309	120058-20	120058-21	41027-1	*

** Less than one pound or .45 kilograms. **Set of 50.*

Soil Sampling

Trap Valves

Trap valves are inserted in open shoes where they hold thin mud and other watery substances.

Trap Valves			
Used w/ Sampler O.D.	Part No.	Weight Lbs.	Weight kg.
2"	320273	*	*
2-1/2"	320274	*	*
3"	320275	*	*
3-1/2"	320276	*	*
4-1/2"	320277	1.0	.45

** Less than one pound or .45 kilograms.*

Special Couplings–

For Samplers

This special coupling is designed for connecting two, three or more standard samplers together. Ideal when long samples are desired of marine or other easily sampled materials for visual inspection. Split or solid type sampler may be tandem connected. The inside diameter of coupling permits use of sampler liners. Sampler shoe may be fitted with a "Trap" or "LAD" basket retainer. Coupling is capable of withstanding light duty driving of sampler.

Special Sampler Couplings			
Sampler O.D.	Part No.	Weight Lbs.	Weight kg
2"	120161-1	1.0	.45
2-1/2"	120161-2	1.0	.45
3"	120161-3	1.0	.45
3-1/2"	120161-4	1.5	.72
4-1/2	120161-5	1.5	.72

Sampler Liners

These liners are used for quickly removing the sample from the sampler. Each end of the liner is covered with plastic caps to keep the sample intact.

Liners for Split and Solid Tube Samplers									
Sampler Size		Sample Length		Core Diameter		Brass			Clear Plastic
							Weight		
Inches	mm	Inch	mm	Inches	mm	Part No.	Lbs.	kg	Part No.
2	50.8	18	457.2	1-3/8	34.9	120060-7	1.5	.67	120878-1
2	50.8	24	609.6	1-3/8	34.9	120060.16	2.0	.90	120878-2
2-1/2	63.5	18	457.2	2-1/8	53.9	120060-2	3.0	1.3	120878-7
2-1/2	63.5	24	609.6	2-1/8	53.9	120060-18	3.5	1.5	120878-8
3	76.2	18	457.2	2-3/8	60.3	120060-10	3.5	1.5	120878-9
3	76.2	24	609.6	2-3/8	60.3	120060-19	4.0	1.8	120878-3
3-1/2	88.9	18	457.2	3-1/8	79.3	NA	—	—	120878-10
3-1/2	88.9	24	609.6	3-1/8	79.3	NA	—	—	120878-11
4-1/2	114.3	18	457.2	4-1/8	104.1	NA	—	—	—
4-1/2	114.3	24	609.6	4-1/8	104.1	NA	—	—	—

** Less than one pound or .45 kilogram.*

Plastic Caps–

For Sampler Tubes

These caps are for thin wall tubes, stationary piston sampler tubes and one inch retractable plus samplers. They are furnished in plastic, copper and aluminum.

Soilseals

Soilseals are simple to seal, unseal and reseal, even in sample tube containing sublength samples.

Plastic Caps — Soil Seals For Thin Wall Sample Tubes					
Size		Plastic Caps		Soilseals Assemblies	
Inches	mm	Part No.	Wt.	Part No.	Wt.
1	25.4	90367-24	*	—	—
2	50.8	90367-43	*	120872-1	*
2-1/2	63.5	90367-49	*	120872-2	*
3	76.2	90367-55	*	120872-3	*
3-1/2	88.7	90367-56	*	—	—
4-1/2	113.7	—	*	—	—
5	127.0	—	—	120872-5	—

**Less than one pound or .45 kilogram.*

Sealing Wax–

For Sampler Tubes

This is a low shrinkage wax, selected to seal samples in tubes and jars before shipping the samples to the laboratory or inspection point. The wax is microcrystaline in quality.

Sealing Wax For Sampler Tubes		
Part No.	Weight Lbs.	Weight kg
120284	10	4.53

Part No. 41007-1
Complete Soil Sampling Kit – Cart (Optional)

Part No. 41007-9
Complete Soil Sampling Kit – Wooden Box

Soil Sampling Kit Depth Capacity — 25 Feet or 7.6 meters				
Description	No. Req.	Part No.	Weight	
			Lbs.	kg
Soil Sample Kit — Complete for 25 Ft. Depths	1	41007-1	390	86.2
Kit consists of:				
Chopping Bit, Straight Edge, 2-1/8" wide	1	21083-1	6.0	2.7
Drive Head Assembly with Wash Tee and Handle	1	22070-1	8.0	3.6
Glass Sample Jars with Caps	12	22081-11	*	*
Drill Rods, 1-5/16" O.D., 2 Ft. 6 In. Long	10	21041-1	7.0	3.1
2" Thin Wall Sampler, 18" Long *(12" Sample)*	1	22071-1	6.0	2.7
Extra Heavy Assembly for Thin Wall Sampler	**	22033-31	3.0	1.4
Extra Tubes *(Steel)* for Thin Wall Sampler	**	120021-9	1.0	.45
2" Split Tube Sampler, 18" Long *(12" Sample)*	1	22072-1	9.0	4.0
Extra Head Assembly for Split Tube Sampler	**	22036-33	3.0	1.3
Extra Split Tube Only 18" Long	1	22016-31	5.0	2.2
Paper Liner *(For Split Tube Sampler)*	2	120268	*	*
Closed Spiral Auger *(1-7/8" O.D., 18" Long)*	1	320304	5.0	2.2
Open Spiral Auger *(2" O.D., 18" Long)*	1	320303	5.5	2.4
Probe *(to Fit Drill Rods, 1-5/16" O.D.)*	1	110060-9	1.5	.68
Handle for Drive Head *(Extra)*	**	110018	3.5	1.5
Iwan Post Hole Auger *(to Fit Drill Rods)*	1	32013-1	*	*
Pipe Wrench *(18")*	2	91100-5	4.5	2.0
Special Coupling *(for Coupling 2 Samplers Together)*	1	120161-1	*	*
Basket Retainr *(for use with Split Tube Sampler)*	1	320110	1.0	.45
Trap Valve *(for use with Split Tube Sampler)*	1	320273	*	*
Sawtooth Shoe *(for use with Split Tube Sampler)*	1	320114-1	*	*
Pocket Shoe *(for use with Split Tube Sampler)*	1	120112-1	1.5	.68
L.A.D. Retainer 2" *(for use with Split Tube Sampler)*	1	22037-1	*	*
Spring Sample Retainer *(for use with Split Tube Sampler)*	1	22037-2	*	*
Compartmented Steel Carrying Case *(Length-36"; Width-21"; Height- 8"; Export Cu. Ft.-3.5)*	1	151823-2	50.0	23.0

*** Suggested spares not part of complete kit. * Less than one pound or .45 kilogram.*

Soil Sampling Kit

All Hand Operation

This is one of the most popular and useful kits for preliminary investigations. The assembly consists of 15 different earth soil sampling tools in a handy steel case small enough to be carried in an auto. The set contains a variety of tubes, earth augers and samplers capable of recovering samples from most materials except rock. It is designed for hand operation.

Recommend 14.0 lb. *(6.3 kg.)* sledge hammer for driving split tube sampler or probe.

Vane Shear Test Kit with Adapters

For Operations in Three Sizes of Pipe or Casing

The Acker Vane Shear Test Kit has everything needed to obtain fast, accurate "in place" shear readings to depths of 100 feet. It's easy to use and provides accurate soils information at low cost! For ease in carrying, the entire set of tools is packaged in a handy kit. *(Carrying case with handles.)*

Two torque wrenches are included in the kit with a high and low range for shearing soft cohesive materials or heavier clays.

Acker Vane Shear Test Kit — With "Torque Wrenches"				
Description	No. Req.	"AW" Rods Part No.	Weight Lbs.	Weight kg
Complete Kit Assembly in Case with Handles	1	41003-16	95.0	43.0
Parts List				
2" O.D. *(50.8 mm)* Vane *(for use inside 2-1/2" Pipe — BX or BW Casing)*	1	320211-9	4.0	1.8
2-1/2" O.D. *(63.5 mm)* Vane *(for use inside 3" Pipe — NX or NW Casing)*	1	320211-7	4.5	2.0
3-5/8" O.D. *(92.0 mm)* Vane *(for use inside 4" Drive Pipe — HW Casing)*	1	320211-8	5.0	2.2
Ball Bearing Guides *(for 2-1/2" Pipe — BX or BW Casing)*	4	22003-5	14.0	6.3
Collar Guides *(for 3" Pipe — NX or NW Casing)*	4	120698	3.0	1.3
Collar Guides *(for 4" Drive Pipe or HW Casing)*	4	120699	8.0	3.6
Thrust Bearing Guide *(for Customer's Rods)*	1	120356-2	4.5	2.0
Collar with Set Screws	1	120619	5.0	2.2
Adapter — Drill Rod to Torque Wrench	1	320621	2.0	.90
Torque Wrench 0-200 Inch/Pounds Capacity *(2.305 kg/meters)*	1	120359-1	0.5	.20
Torque Wrench 0-600 Inch/Pounds Capacity *(6.615 kg/meters)*	1	120359-2	1.0	.45
Thrust Bearing	1	90000-26	1.0	.45
Coupling for 2-1/2" Drive Pipe *(2-1/2" x 3")*	1	90980-30	4.0	1.8
Coupling for 3" Drive Pipe *(3" x 3")*	1	90304-11	3.5	1.5
Coupling for 4" Drive Pipe *(4" x 4")*	1	90980-39	6.5	2.9
Carrying Case and Instructions	1	25111-4	23.0	10.4

Vane Shear Test Kit with Calibrated Torque Head

For extreme accuracy and where extensive testing justifies additional equipment expense, the Acker calibrated torque head is recommended. The high ratio geared head permits even, angular rotation of the vane.

Readings are shown on a precision force gauge that features a maximum reading hand for precise accuracy without guess work! The torque arm has 3 positions for shearing soft, medium or stiff soils. The base is divided into 10 degrees intervals for ease in recording data. Complete operating instruction are included. *(Kit includes two plywood carrying cases with rope handles.)*

Acker Vane Shear Test Kit With "Calibrated Torque Head"				
Description	No. Req.	"AW" Rods Part No.	Weight Lbs.	Weight kg
Complete Kit Assembly in Case with Handles	1	41003-3	161.0	72.9
Parts List				
2" O.D. *(50.8 mm)* Vane *(for use inside 2-1/2" Pipe — BX or BW Casing)*	1	320211-9	4.0	1.8
2-1/2" O.D. *(63.5 mm)* Vane *(for use inside 3" Pipe — NX or NW Casing)*	1	320211-7	4.5	2.0
3-5/8" O.D. *(92.0 mm)* Vane *(for use inside 4" Drive Pipe — HW Casing)*	1	320211-8	5.0	2.2
Ball Bearing Guides *(for 2-1/2" Pipe — BX or BW Casing)*	4	22003-5	14.0	6.3
Collar Guides *(for 3" Pipe — NX or NW Casing)*	4	120698	3.0	1.3
Collar Guides *(for 4" Drive Pipe or HW Casing)*	4	120699	8.0	3.6
Calibrated Drive Unit Assembly *(720:1 Ratio)*	1	22001-5	40.0	18.1
Sub *(2-1/2" Pipe box to Vane Shear Body)*	1	110944-1	5.0	2.2
Sub *(3" Pipe box to Vane Shear Body)*	1	110500-2	5.0	2.2
Sub *(4" Pipe Box to Vane Shear Body)*	1	110945-1	8.0	3.6
Sub *(NW Casing Pin to Vane Shear Body)*	1	111205-1	7.0	3.1
Max. Reading Force Gauge *(100 lbs. cap) (43.36 kg)*	1	22002-1	2.0	.90
Speed Crank *(3/8" Drive)*	1	120326	2.5	1.1
Upper Force Arm	1	120373	7.0	3.1
Lower Force Arm	1	120325	6.0	2.7
Thrust Bearing	1	90072-110	1.5	.67
Vane Housing Body *(Less Worm Gears)*	1	120207	12.0	5.4
Gauge Block	1	120323	1.0	.45
Carrying Case and Instructions	1	120210	23.0	10.4

Other lightweight equipment for use with the Motorized Cathead and Aluminum Derrick. (See Page 1-12 of Drill Rig Section for description of Pipe Mounted Diamond Core Drill.)

Portable Motorized Cathead Lightweight Motorized Hoist and Portable Aluminum Derrick				
Description	Part No.	Weight		Cu. Ft.
		Lbs.	kg	
Complete Assembly	40032-1	345	90.6	17.0

Assembly Consists Of:				
Description	Part No.	Weight		Cu. Ft.
		Lbs.	kg	
Comb. Motor Cathead w/Clamp	25060-3	155	45.3	3.0
Aluminum Tripod Derrick, Tie Bolt and Bail *(for 10 ft. pulls)*	25505-2	165	40.7	8.5
Tripod Sheave for Manila Rope	25031-7	10.0	4.5	—
Manila Rope *(75 feet)*	110450-75	14.0	6.3	1.0
Safety Hook	90351-1	*	*	—
Extra Gasoline Engine*	25007-93	35.0	15.8	2.0
** Not included with Assembly.*				

Specifications	
Engine Type	4-Cycle Gasoline
Capacity Rated	500 lbs. *(226.5 kg)*
Cathead *(113.7 x 156.4 mm)*	4-1/2" x 6" Long
Derrick Work Length	10 ft. long *(3.048 Meters)*
** Less than one pound or .45 kilograms*	

Acker Lightweight Motorized Hoist and Portable Aluminum Derrick

This lightweight, portable motorized cathead is 4-cycle gasoline motor driven. It includes a built-in centrifugal clutch that permits the cathead to stop when the engine is at idle. The cathead is driven by a sprocket and chain drive enclosed by safety guards. Engine RPM is 3,600. Cathead is 4-1/2" O.D. and turns at 175 to 225 RPM. Lifting capacity is rated at 500 lbs. It is ideal for use with a 140 lb. drive weight or soil sample kit. The aluminum derrick is designed to accommodate lifting tools in 10 ft. sections. The derrick legs are 16 ft. long consisting of two 8 ft. lengths to facilitate transportation into remote areas or marine type conditions.

Soil Sampling

Acker Soil Mechanic–Model "S"

Lightweight • Portable • Goes Any Place

Acker has designed the Soil Mechanic with many features and options to provide versatility for small diameter auger borings and soil sampling to shallow depths...The Model "S" *(Stand Mounting)* has a 7.0 HP highly efficient 4-cycle air cooled gasoline engine for drilling conveyor flight augers. Optional jib and cathead permit the driving of Standard *(ASTM)* Penetration Tests with the 140 lb. drive weight and 2" O.D. Sampler. The power head is attached to the swivel mounting post by a sliding fixture. The swivel post base allows the post to turn for lining up power drive to the optional cathead hoist assembly. This design feature allows the power head to be swiveled clear of the hole for soil sampling and driving operations. The assembly includes a centering guide, 4 anchor pins and two sets of noise suppressor ear muffs.

Tow Tongue (Optional)—Provides a simple method for taking the auger assembly into remote or rugged job sites. Not designed for towing in back of motor transport. The tongue and dolly wheel save the back breaking task of moving the equipment from hole to hole.

Acker Soil Mechanic
Model "S" — Complete Assembly

Part No.	Description	Weight Lbs.	Weight kg
—	Complete Assembly 36.0 Cu. Ft. *(1.0m³)*	206	93.0

Drill Kit "A"
3-1/2" *(90mm)* Holes to 24 ft. *(7.3m)* Depths

Part No.	Description	Weight Lbs.	Weight kg
41005-11	Complete Kit 4.75 Cu. Ft. *(0.13 m³)*	140	64.0

Standard Model "S" Soil Mechanic for auger drilling soils. Note: Hand feed wheel, auger power head and drill platform. Ideal for shallow investigations. Cathead Optional.

Contents: Drill Kit "A"

Qty.	Description
1	Articulated Adapter *(Engine to Auger)*
8	Conveyor Flight Augers 3" O.D. x 36" Long *(76.2 mm x 914 mm)*
8	Drive Pin Connectors for Coupling Augers Together
1	3-1/4" O.D. *(82.5 mm)* Cutter Head with 2 Carbide Insert Fingers and Pilot
1	Auger Holding Fork
1	Rigid Sub. 1-3/8" Hex. Box to 1-1/8" Hex. Box

Optional Accessories or Spare Parts

Description	Part No.	Weight Lbs.	Weight kg
Auger — Power Head with Transmission *(150 RPM)* and 4 Handles	25002-102	72.0	32.7
3" O.D. x 36" Long Conveyor Flight Auger with 1-1/8" Hex Connections *(76.2 mm x 914 mm with 28.6 mm Hex Conn.)*	330098-9	15.0	6.8
3-1/4" O.D. Cutter Head *(for above Auger Flight) (82.5 mm O.D.)*	23003-4	5.0	2.2
Carbide Insert Finger for above Cutter Head *(2 Req.)*	130319-1	*	*
Pilot Bit *(for use with Cutter Head)*	130320	4.0	1.8
Drive Pin *(for Connecting Augers)*	130064-3	*	*
Universal Adapter Between Engine and Auger Flights *(Model "S" Only)*	25130-61	4.0	1.8
Sub-Adapter Between Engine and Auger Flights *(Model H)***	130039-11	7.0	3.1
Dolly Wheel with Tow Handle	25066-5	23.0	10.4
Cathead Hoist Drum with Right Angle Gear Box *(4" O.D. x 4" Long) — (152.4 mm x 101.6 mm)*	50015-16	45.0	20.4
Hoisting Jib and Mounting with Built-In Sheaves Two Piece 140 lb. *(63.4 kg)* Drive Weight with Pin	50061-3	20.0	9.0
Guide and Drive Head	21138-1	145.0	65.6
Length 3/4" Manila Rope x 25 Ft. Long *(19 mm x 7.6 m)*	110450-25	7.0	3.1
Noise Suppressor Head Set Ear Muffs	157293-1	1.5	0.68
Holding Fork	330109	8.0	3.6
Pull Plate with Chains	311339	2.0	0.90
Drive Head for AW Rods	111336	3.0	1.36
Pin Guide for AW Rods	111332	1.0	0.45
Eye bolt for Coupling Drive Weights	353499-4	1.0	0.45
Set Carrying Handles for two 70 lb. *(31.7 kg)* Drive Weights	111337	*	*
	111338	*	*

** Less than one pound or 0.45 kg. ** Use with Model "H" Assembly Only.*

Acker Octagonal– 8 Sided Hollow Stem Augers

Application

The Hollow Stem Auger is recognized as a versatile, fast, effective tool for advancing the drill hole and "keeping the hole open." Once the drilling depth is achieved, the center stem of the auger is quickly removed and allows working inside the Hollow Stem using coring tools, soil sampling equipment, down-the-hole hammers or for inserting tie back rods and cables, well points and drain pipes.

The Hollow Stem is widely used in conjunction with Ground Water Monitoring drilling applications and hazardous waste operations.

Octagonal Hollow Stem Augers – Flights & Adapters

Auger Size	H.S. Auger 5 Ft. w/ Lockscrew	Adapter Cap		Center Stem Adapter				
		1-5/8" Hex w/ Lockscrew	2" Hex w/ Lockscrew	AW	NW	HW	AWJ	NWJ
3-1/4"	330359-0	330695-0	330696-0	330914-1	330914-3	NR	330914-2	330914-4
4-1/4"	330608-0	330684-0	330685-0	330857-0	330857-2	NR	330857-1	330857-3
6-1/4"	330647-0	330837-0	330691-0	NR	330861-0	330861-5	NR	330861-1
8-1/4"	330742-0	NR	330745-0	NR	330862-0	330862-5	NR	330862-1
10-1/4"	330893-0	*4-1/4" Octagon Female* 330896-0		*4-1/4" Hollow Stem Only* 330898-0				
12-1/4"	330785-0	*4-1/4" Octagon Female* 330791-0		*4-1/4" Hollow Stem Only* 330851-0				

NR = Not Recommended.

Cutter Heads

Cutter heads for Hollow Stem Augers are designed with replaceable-type carbide inserts. The cutter head design allows the center plug with the pilot bit to be positioned slightly ahead of the cutter head. A hollow bore drill head allows the center plug to be withdrawn to the surface when the desired depth of the hole is reached. Center stem rods are used to connect the center plug to the center stem adapter and adapter cap of the auger string at the surface.

Conical Type

Finger Type

Octagonal Hollow Stem Augers – Cutter Heads & Bits

Auger Size	Cutter Heads		Replacement Cutter Bits			
			Finger		Conical	
	Conical Part No.	Finger Part No.	Part No.	No. Req'd.	Part No.	No. Req'd.
3-1/4"	23025-18	23025-23	130068-116	4	130417-2	5
4-1/4"	23025-25	23025-24		4		6
6-1/4"	23025-27	23025-26		6		8
8-1/4"	23025-32	23025-31		8		10
10-1/4"	23025-42	23025-41		12		12
12-1/4"	23025-34	23025-33		12		15

Replacement Cutter Bit Conical Type

Replacement Cutter Bit Finger Type

Auger Tools

Octagonal Hollow Stem Augers

Now Standard—"New Quick Make-up" Type

- Increases Production
- Fast Make-Up
- Safety Feature

For a complete lead assembly, the following items are required:

A. Hollow Stem Auger *(5 ft.)*
B. Adapter Cap
C. Center Stem Adapter
D. Center Plug
E. Center Stem
F. Cutter Head

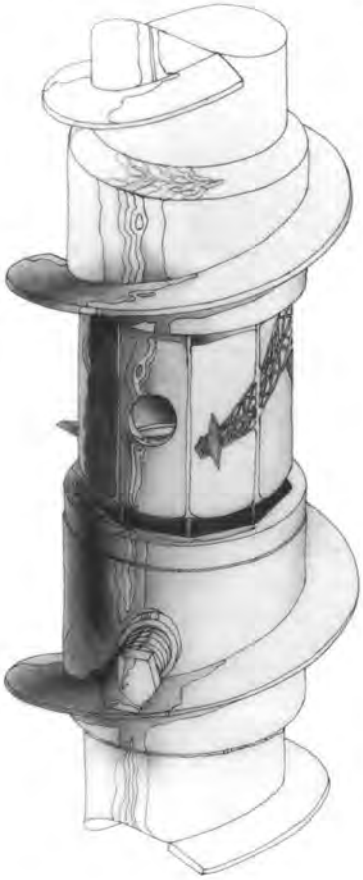

Adapter Cap

Center Stem Adapter

Center Plug

Center Plug w/Drag Bit – Replacement Parts

Auger Size	Reference Part No.	Conn.	Replacement Fingers		Replacement Pockets			
					Angled		Straight	
			Part No.	No. Req'd.	Part No.	No. Req'd.	Part No.	No. Req'd.
3-1/4"	330913-0	NWJ Box	130068-116	2	130739-7	2	—	—
4-1/4"	330720-1	NWJ		4	130739-6	2	130739-5	2
6-1/4"	330775-1	NWJ		4	130739-3	2	130739-4	2
8-1/4"	330764-1	NWJ		6		4		2
10-1/4"	330902-0	4-1/4" Sckt.		14		12		2
12-1/4"	330848-0	4-1/4" Sckt.		14		12		2

Octagonal Hollow Stem Augers – Parts & Accessories

Description	Hollow Stem Auger Size					
	3-1/4" Part No.	4-1/4" Part No.	6-1/4" Part No.	8-1/4" Part No.	10-1/4" Part No.	12-1/4" Part No.
Center Plug w/ Drag Bit – (NWJ Box)	See Center Plugs.					
Center Plug – (NWJ)	330913-0	330720-1	330775-1	330764-1	330902-0†	330848-0†
Sub – Center Plug – (NWJ Pin – AW Pin)	111584-3	111584-3	NR	NR	—	—
Sub – Center Plug – (NWJ Pin – NW Pin)	111584-5	111584-5	111584-5	111584-5	—	—
Sub – Center Plug – (NWJ Pin – AWJ Box)	111635-12	111635-12	NR	NR	—	—
Center Stem – (AW Rod) – 5 ft.	21005-5	21005-5	—	—	—	—
Center Stem – (NW Rod) – 5 ft.	21007-32	21007-32	21007-32	21007-32	—	—
Center Stem – (AWJ Rod) – 5 ft.	21156-6	21156-6	—	—	—	—
Center Stem – (NWJ Rod) – 5 ft.	21157-6	21157-6	21157-6	21157-6	—	—
Center Stem – 4-1/4" Oct. Socket Conn. 5 ft. Male/Female	—	—	—	—	330815-1	330815-1
Adapter Cap – 4-1/4" Octagonal Socket Conn.	—	—	—	—	330896-0	330791-0
Lock Screw – Standard	130365-0	130365-0	130660-0	130660-0	130660-0	130660-0
Boss *(Repair Lockscrew Threads)*	161273-0	161273-0	161273-2	161273-2	161273-2	161273-2
Holding Fork	330190-0	330627-0	330439-0	330659-0	330904-0	330802-0
Recovery Tools	330177-44	330177-49	330177-50	330177-51	330177-53	—

** Used w/ Socket Adapter Cap † 4-1/4" Hollow Stem Socket Only. NR = Not Recommended.*

Conventional Conveyor Flight Augers

With the addition of a Cutter Head, conveyor flight augers are commonly used for drilling to 100 ft. *(30.5mm)* depths where soil cover permits. Obviously, the sizes are many, but the most commonly used sizes are listed as standard. Cutter heads generally are somewhat larger in diameter than the conveyor flight to provide clearance for the cuttings to work easily to the surface. Optional features such as "hard facing" of the augers can be provided for added tool life when drilling abrasive formations. Flight connector pins are the drive pin type—simple but rugged. Conveyor flight auger lengths vary but 3 ft. and 5 ft. *(.9144m - 1.524m)* are the most popular lengths. Consult the chart for pitch and standard connections commonly used for auger boring applications. All flight augers are timed or synchronized—there are no gaps in the flight between auger sections.

NOTE: Augers are furnished with standard hexagonal shank or socket connections.

NOTE: When drilling conditions are difficult, augers may be "hard faced," the full length or 6 inches on each end. When desired simply specify, H.F. "full length" or "each end."

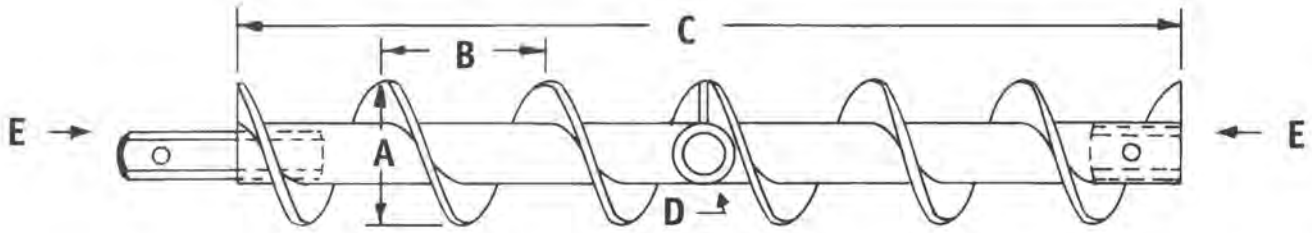

Conventional Conveyor Flight Augers
With Standard Hexagon Connections

"A" Auger Diameter	"B" Spiral Pitch	"C" Flight Length	"D" Axle Diameter	"E" Type Connection	Part No.	Weight* Lbs.	Weight* kg	Type Service
2-1/2" *(63.5mm)*	2-3/4" *(69.8mm)*	3 Ft. *(0.914m)*	1-1/8" x 21/32" *(28.5 x 16.0mm)*	1-1/8" Hex *(28.5mm)* Use Drive Pin no. 130064-3	330523-1	8.0	3.6	Standard
		5 Ft. *(1.524m)*			330523-2	11.0	5.0	
3" *(76.2mm)*	3" *(76.2mm)*	3 Ft. *(0.914m)*	1-1/2"x1" *(38.1 x 25.4mm)*		330098-9	10.0	4.5	Heavy Duty
		5 Ft. *(1.524m)*			330098-4	15.0	6.7	
4" *(101.0mm)*	3" *(76.2mm)*	3 Ft. *(0.914m)*			330069-1	13.0	5.8	Heavy Duty
		5 Ft. *(1.524m)*			330069-3	21.0	9.5	
4" *(101.0mm)*	3" *(76.2mm)*	3 Ft. *(0.914m)*	1-1/2" x 1-3/16" *(38.1 x 30.1mm)*		330069-23	13.0	5.8	Standard
		5 Ft. *(1.524m)*			330064-27	21.0	9.5	
4" *(101.0mm)*	4" *(101.0mm)*	3 Ft. *(0.914m)*	2" x 1-1/2" *(50.8 x 38.1mm)*	1-5/8" Hex *(41.2mm)* Pin no. 130064-1	330069-28	13.0	5.8	Heavy Duty
		5 Ft. *(1.524m)*			330069-29	21.0	9.5	
4-1/2" *(113.7mm)*	4" *(101.0mm)*	3 Ft. *(0.914m)*			330135-4	14.0	6.3	Heavy Duty
		5 Ft. *(1.524m)*			330135-6	21.0	9.5	
5-1/2" *(139.7mm)*	5" *(127.0mm)*	3 Ft. *(0.914m)*			330136-4	18.0	8.1	Heavy Duty
		5 Ft. *(1.524m)*			330136-6	30.0	13.5	
5-1/2" *(139.7mm)*	4" *(101.0mm)*	3 Ft. *(0.914m)*			330524-1	18.0	8.1	Heavy Duty
		5 Ft. *(1.524m)*		1-5/8" Hex *(41.2mm)* 130064-2	330524-2	30.0	13.5	
5-7/8" *(149.2mm)*	5" *(127.0mm)*	3 Ft. *(0.914m)*	2-7/8" x 2-9/16" *(72.4 x 65.0mm)*		330066-9	27.0	12.1	Standard
		5 Ft. *(1.524m)*			330066-0	45.0	20.3	
5-7/8" *(149.2mm)*	6" *(152.4mm)*	3 Ft. *(0.914m)*	2-7/8" x 2-1/4" *(72.4 x 57.1mm)*	Drive Pin no. 130064-2	330066-11	27.0	12.2	Heavy Duty
		5 Ft. *(1.524m)*			330066-12	45.0	20.3	
7" *(177.8mm)*	7" *177.8mm)*	3 Ft. *(0.914m)*	2" x 1-1/2" *(50.8 x 38.1mm)*	Pin no. 130064-1	330138-1	35.0	15.8	Standard
		5 Ft. *(1.524m)*			220138-3	55.0	25.0	
8-7/8" *(225.4mm)*	8" *(203.2mm)*	3 Ft. *(0.914m)*	2-7/8" x 2-1/4" *(73.0 x 57.1mm)*	Pin no. 130064-2	330089-10	39.0	17.6	Heavy Duty
		5 Ft. *(1.524m)*			330089-12	59.0	26.7	
10" *(254.0mm)*	10" *(254.0mm)*	3 Ft. *(0.914m)*			330525-1	46.0	20.8	Heavy Duty
		5 Ft. *(1.524m)*			330525-2	73.0	33.0	

For Hole Diameters: See Cutter Head Sze.
** Weights are ±10%*

Finger Type Cutter Heads
For Flight Augers

This drill head or "Cutter Head" is designed for use on Conveyor Flight type augers. The head is constructed of high quality steel and designed for use with hard faced or carbide inset type finger cutters. Carbide insert fingers are commonly used to drill reasonably hard rock and shales. The cutter head is held on the flight auger by means of a drive clip pin and rotated by the standard shank and socket connection. Finger teeth are held in place by a drive wedge or soft wire pins. Select cutter head diameter on basis of hole diameter desired and select flight size or diameter, about 10% less than cutter head diameter...or hole size.

Finger Type Cutter Heads
For Flight Augers

Diameter Range			Assembly With					Wedge Type		Bits				
Cutter or Hole Size		Hex Conn.	Hard Faced Bits	Carbide Insert Bits	Heavy Duty Carbide Insert Bits	Weight		No. Req'd	Part No.	No. Req'd	Hard Faced Front & Back	Standard Carbide Inserts	Heavy Duty Carbide Inserts	Wgt.
in.	mm					Lbs.	kg							
3-1/4	82.5	1-1/8	—	—	23001-032116	9.0	4.0	Pin Type		2	—	—	130068-116	*
4-1/2	113.0	1-1/8	23001-072073	23001-072076	—	13.0	5.8	2	130067-7	4	130068-073	130068-076	—	*
		1-5/8	23001-072073	23001-072076	—									*
4-3/4	120.0	1-1/8	—	—	23001-032116	15.0	6.7	Pin Type		4	—	—	130068-116	*
		1-5/8	—	—	23001-032116						—	—		
5	152.4	1-1/8	23001-102073	23001-102076	—	16.0	7.2	2	130067-8	6	130068-073	130068-076	—	*
		1-5/8	23001-103073	23001-103076	—			2	130067-9					
5-1/2		1-1/8	23001-112083	23001-112086	—	18.0	8.1	2	130067-8	6	130068-083	130068-086	—	*
	165.1	1-5/8	23001-113083	23001-113086	—			2	130067-9					
6-1/4		1-1/8	23001-142073	23001-142076	—	20.0	9.0	4	130067-9	8	130068-073	130068-076	—	*
	158.7	1-5/8	23001-143073	23001-143076	—									
7	177.8	1-5/8	23001-173073	23001-173076	—	22.0	10.0	4	10067-9	8	130068-073	130068-076	—	*
8-1/4	209.5	1-5/8	23001-203073	23001-203076	—	25.0	11.3	4	130067-9	10	230068-073	130068-076	—	*
9-1/4	234.9	1-5/8	23001-223073	23001-223076	—	27.0	12.2	6	130067-9	12	130068-073	130068-076	—	*
10	254.0	1-5/8	23001-243073	23001-243076	—	30.0	13.5	6	130067-9	12	130068-073	130068-076	—	*
12	304.8	1-5/8	23001-253073	23001-253076	—	35.0	15.8	6	130067-9	14	130068-073	130068-076	—	*

** Less than one pound or .45 kilograms.*

Auger Tools

Drive Pins

Steel drive pins are used to secure connecting ends of conveyor flight augers. The drive pin is driven into place with a hammer and removed by the pointed end of the hammer. Since driving will gradually weaken the clip, replacements should always be considered when ordering. Sizes will depend upon augers in use.

Drive Pins			
Auger Series	Part No.	Weight	
		Lbs.	kg
Standard Duty	130064-1	*	*
Heavy Duty	130064-2	*	*
Extra Heavy Duty	130064-2	*	*
Light Duty	130064-3	*	*
Extra Light Duty	130064-4	*	*

** Less than one pound or .45 kilogram.*

Auger Repair Connections

Repair connectors are used for replacing worn shank or socket connections on conveyor or auger flights.

NOTE:
Square pin & socket — optional
Hex pin & socket — standard

Auger Repair Connections				
Connector Size	Socket Part No.	Shank Part No.	Weight	
			Lbs.	kg
1-1/8" Hex	90886-2	90887-3	4.0	1.8
1-5/8" Hex	90886-3	90887-4	4.0	1.8
2" Hex	90886-12	90887-12	4.0	1.8

Auger to Rod Adapters

Sub adapters are helpful when switching from auger tools to sampling tools having drill rod threads. Standard adapters are usually pin to pin connections.

Auger To Rod Adapters			
Size Connection	Shank to Rod Pin	Weight	
Pin to Pin	Part No.	Lbs.	kg
1-1/8 Hex. to AW Rod	130036-7	6.5	2.9
1-5/8 Hex. to AW Rod	130063-4	7.0	3.1
1-5/8 Hex. to BW Rod	130063-7	8.0	3.6
1-5/8 Hex. to NW Rod	130063-3	10.0	4.5

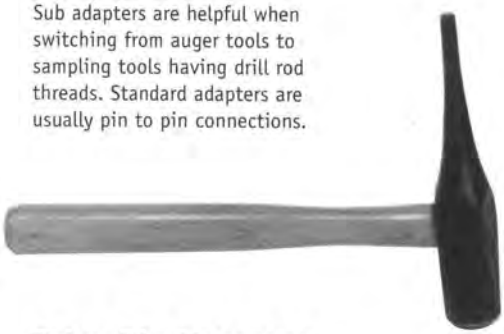

Drive Pin-Hammer

This hammer is ideal for driving clip pins on conveyor flight augers.

Hammer For Drive Clip Pins		
Part No.	Weight	
	Lbs.	kg
130108-0	2.0	.90

Auger Tools

Side Feed Water Swivel

Side Feed Water Swivel Assembly Ball Bearing Type • Maximum Working Pressure — 150 P.S.I.				
Description	**1-1/8" Hex to AW Pin**	**1-5/8" Hex to AW Pin**	**1-5/8" Hex to NW Pin**	**2" Hex to NW Pin**
Assembly Part Number	21064-7	21064-9	21126-1	21126-5
Water-Course Diameter	5/8" *(15.9mm)*	5/8" *(15.9mm)*	1-3/8" *(34.9mm)*	1-3/8" *(34.9mm)*
Hose Connection	3/4" NPT *(19.1mm)*	3/4" NPT *(19.1mm)*	1-1/4" NPT *(31.8mm)*	1-1/4" NPT *(31.8mm)*
Spare Parts for Acker Side Feed Water Swivel				
Stem	110777	111210	111211	11636
Body	110454	110454	110459	110459
Bearing *(2 Req'd)*	90071-109	90071-109	90071-114	90071-114
"O" Ring *(2 Req'd)*	90759-329	90759-329	90759-336	90759-336
Retaining Ring *(2 Req'd)*	90202-177	90202-177	90202-275	90202-275
Nipple	90313-24	90313-24	90313-55	90313-55
Grease Fitting	90359-7	90359-7	90359-7	90359-7
Assembly Weight – Lbs. *(kg)*	13 *(5.9kg)*	13 *(5.9kg)*	18 *(8.2kg)*	18 *(8.2kg)*

Side Feed Water Swivel

For use with drill rigs not having hollow spindles. Adapts direct to rotary stem or kelly. Water is fed into side part and down through drill rods. Used with auger drills for either high or low speed application, coring fish tailing, or small roller rock bits. Advise spindle connection, inlet port and rod size desired. Working pressure 150 PSI MAX. Ball Bearing type with 3/4" and 1-1/4" inlet ports.

Hoisting Bails for Augers			
Socket Connection	**Part No.**	**Weight**	
		Lbs.	**kg**
1-1/8" Hex	330113	3.5	1.5
1-5/8" Hex	330114	4.0	1.8
2" Hex	330441	5.0	2.2

Hoisting Bail

The hoisting bail is used for hoisting free auger flight strings from the bore hole. The standard connection is a socket to match shank connection on augers. This bail is a safeguard when hoisting augers with manila rope or wire line, and prevents damage to rope and auger tools. Ideal for conventional and Hollow Stem Augers.

Auger Holding Fork			
Auger Series	**Part No.**	**Weight**	
		lbs.	**kg**
Light Duty	330109	8.0	3.6
Standard Duty	330110	9.0	4.0
Heavy Duty - Ex. Heavy Duty	330110	11.0	4.9
3-1/4" x 6-1/4" Hollow Stem	330190	14.0	6.4
4-1/4" x 7-1/4" Hollow Stem	330627	20.0	9.1
6-1/4" x 11" Hollow Stem	330439	33.0	15

Auger Holding Forks

This fork is used to support the auger string when disconnecting or withdrawing flights from the hole. Holding forks are available for all types of augers and service.

Recovery Tools

Twists over lost flights in a bore hole...this screw type tool is lowered into hole on the end of an extension rod. Upon contact, the assembly is rotated with a hand wrench in clockwise direction. After rotating and engaging of lost flight is made fast, the tools are carefully hoisted to surface. Turning during hoisting minimizes the danger to tools disconnecting—power rotation is not recommended—advise size of tools for recommendations.

Auger Recovery Tool					
Axle Diameter	**Flight Pitch**	**Shank Connection**	**Part No.**	**Weight***	
				Lbs.	**kg**
1-1/8" *(28.5mm)*	2-3/4" *(69.8mm)*	Hex – 1-5/8" *(41.2mm)*	330177-3	20.0	9.0
1-1/2" *(38.1mm)*	3" *(76.2mm)*		330177-4	25.0	11.3
2" *(50.8mm)*	4" *(101.0mm)*	Hex – 1-1/8" *(28.5mm)*	330177-8	30.0	13.5
2-7/8" *(73.0mm)*	5" *(127.0mm)*		330177-16	35.0	15.8
3-1/4"x6-1/4" Hollow Stem	—	Octagon	330177-44	68.0	30.8
4-1/4"x7-1/4" Hollow Stem	—	Octagon	330177-49	110.0	50.0

** Weights are ± 10%.*